Go To Table Of Contents

M4.9

-001 thru -002

Self-Contained Steam Sterilizer

MIDMARK®

Service and Parts Manual

To purchase a printed copy of this manual, click on the "Place Order" button below.

Place Order

Serial Number Prefixes:
(LT, LV)

M4.9 -0 th -0

NO LONGER IN PRODUCTION

Some service parts may not be available for this product-

FOR USE BY MIDMARK TRAINED TECHNICIANS ONLY

SF-1597

Part No. 004-0114-00 Rev. H (7/08/10)

Style B

Go To Table Of Contents

TABLE OF CONTENTS

Section/Paragraph ..... Page

IMPORTANT INSTRUCTIONS
General Safety Instructions iii
Safety Alert Symbols iii
Warranty Instructions iii

SECTION I GENERAL INFORMATION
1.1 Description Of M4•9 Easyclave™ Sterilizer . 1-1
General Descriptions 1-1
Component Descriptions 1-1
1.2 Specifications 1-3
1.3 Parts Replacement Ordering 1-4
1.4 Special Tools 1-4

SECTION II TESTING AND TROUBLESHOOTING
2.1 Operational Test 2-1
Normal Operation (Table 2-1) 2-2
2.2 Service Diagnostics 2-4
2.3 Steam and Pressure Calibration 2-7
2.4 Troubleshooting Procedures 2-10
Sterilizer has no power 2-11
Touch Pad / Display problems 2-11
Unit will not Fill 2-12
Codes C010 - C060 2-12
Codes C102 - C106 2-12
Codes C232 2-13
Codes C326 2-13
Codes C382 2-13
Codes C383, C384, C385 2-14
Codes C431 2-14
Codes C437 2-15
Codes C461, C467 2-16
Codes C470 - C477 2-17
Codes C533 - C554 2-21
Codes C560 - C567 2-23
Codes C570 - C577 2-23
Codes C633 2-29
Codes C642 - C647 2-30
Codes C660 - C667 2-31
Codes C670 - C677 2-32
Codes C980 - C987 2-37
Instruments not drying 2-39
Biological indicator strip problems 2-40
Maintenance Message 2-40
Printer problems 2-40

SECTION III SCHEDULED MAINTENANCE
3.1 Scheduled Maintenance 3-1

Section/Paragraph ..... Page

SECTION IV MAINTENANCE / SERVICE INSTRUCTIONS
4.1 Introductions 4-1
4.2 Side and Back Panels
Removal 4-1
Installation 4-1
4.3 Top Cover
Removal 4-2
Installation 4-2
4.4 Display P.C. Board
Removal 4-4
Installation 4-4
4.5 Decal Switch
Removal 4-4
Installation 4-5
4.6 Tray Rack and Trays
Removal 4-5
Installation 4-5
4.7 Draining / Filling Reservoir
Draining 4-6
Filling 4-6
4.8 Internal Filter Screen
Removal 4-6
Installation 4-6
4.9 Chamber Mesh Filter
Removal 4-7
Installation 4-7
4.10 Door Gasket
Removal 4-7
Installation 4-8
4.11 Door Interlock Plunger
Removal 4-8
Installation 4-8
4.12 Fuse Replacement 4-10
4.13 Fuse Body
Removal 4-10
Installation 4-10
4.14 Axial Flow Fan
Removal 4-11
Installation 4-11
4.15 Solid State Relay
Removal 4-12
Installation 4-12
4.16 Main Relay
Removal 4-12
Installation 4-13

(*) Indicates that there has been a serial number break for the illustration and that there are additional point page(s) following the original page.

© Midmark Corporation 1999 SF-1597 Rev. 10/02

Printed in U.S.A.

TABLE OF CONTENTS

Section/Paragraph ..... Page

4.17 Transformer
Removal 4-13
Installation 4-14
4.18 Pressure Transducer
Removal 4-14
Installation 4-14
4.19 Steam (Side) Temperature Probe
Removal 4-15
Installation 4-15
4.20 Door Latch Interlock Switch
Removal 4-16
Installation / Adjustment 4-16
4.21 Door Pulse Solenoid
Removal 4-18
Installation 4-18
4.22 Main Control P.C. Board
Removal 4-19
Installation 4-19
4.23 Fan Thermostat
Removal 4-20
Installation 4-20
4.24 Air Solenoid Valve
Removal 4-20
Installation 4-20
4.25 Pressure Relief Valve Test 4-21
4.26 Pressure Relief Valve
Removal 4-22
Installation 4-22
4.27 Vent or Fill Solenoid Valve
Removal 4-23
Installation 4-24
4.28 Auxiliary (Upper) Hi-Limit Switch
Removal 4-25
Installation 4-25
4.29 Lower Hi-Limit Switch
Removal 4-25
Installation 4-26
4.30 Auxiliary (Lower, Trough) Temperature Probe
Removal 4-27
Installation 4-27
4.31 Lower Steam Heating Element
Removal 4-28
Installation 4-28
4.32 Upper Heating Element
Removal 4-29
Installation 4-29
4.33 Water Level Sensor
Removal 4-30
Installation 4-31

Section/Paragraph ..... Page

4.34 Vent Muffler
Removal 4-31
Installation 4-32
4.35 Reservoir
Removal 4-32
Disassembly 4-32
Assembly 4-33
Installation 4-33
4.36 Printer
Removal 4-34
Installation 4-34

SECTION V SCHEMATICS AND DIAGRAMS
5.1 SW2 Dip Switch Settings 5-1
5.2 Main Control P.C. Board (115 VAC) 5-3
5.3 Electrical Schematic (115 VAC) 5-4
5.4 Wiring Diagram (115 VAC) 5-5
5.5 Main Control P.C. Board (230 VAC) 5-6
5.6 Electrical Schematic (230 VAC) 5-7
5.7 Wiring Diagram (230 VAC) 5-8
5.8 Fill Mode Flow Diagram 5-9
5.9 Heating Mode Flow Diagram 5-10
5.10 Sterilize Mode Flow Diagram 5-11
5.11 Vent & Dry Modes Flow Diagram 5-12

SECTION VI PARTS LIST
6.1 Introduction 6-1
6.2 Description Of Columns 6-1
6.3 Torque Specifications And Important Assembly Notes 6-1
Pictorial Index 6-2
Labels and Decals 6-3
Main Enclosure Components 6-4
Plumbing and Sensor Components 6-5
Chamber Assembly Components 6-6
Electrical Components 6-7
Printer Components 6-8
Racks, Trays, and Cleaner 6-9
Packaging 6-10
External Condensing Tank 6-11
Pouch Rack 6-12

COMMENTS 7-1
FAX ORDER FORM 7-2

© Midmark Corporation 1999 SF-1597 Rev 5/02

Printed in U.S.A.

General Safety Instructions

Safety First: The primary concern of Midmark Corporation is that this sterilizer is maintained with the safety of the patient and staff in mind. To assure that services and repairs are completed safely and correctly, proceed as follows:

(1) Read this entire manual before performing any services or repairs on this sterilizer.

(2) Be sure you understand the instructions contained in this manual before attempting to service or repair this sterilizer.

Safety Alert Symbols

Throughout this manual are safety alert symbols that call attention to particular procedures. These items are used as follows:

DANGER

A DANGER is used for an imminently hazardous operating procedure, practice, or condition which, if not correctly followed, will result in loss of life or serious personal injury.

WARNING

A WARNING is used for a potentially hazardous operating procedure, practice, or condition which, if not correctly followed, could result in loss of life or serious personal injury.

CAUTION

A CAUTION is used for a potentially hazardous operating procedure, practice, or condition which, if not correctly followed, could result in minor or moderate injury. It may also be used to alert against unsafe practices.

EQUIPMENT ALERT

An EQUIPMENT ALERT is used for an imminently or potentially hazardous operating procedure, practice, or condition which, if not correctly followed, will or could result in serious, moderate, or minor damage to unit.

NOTE

A NOTE is used to amplify an operating procedure, practice or condition.

Warranty Instructions

Refer to the Midmark "Limited Warranty" printed in the Installation and Operation Manual for warranty information. Failure to follow the guidelines listed below will void the warranty and/or render the M4•9 Easyclave™ Sterilizer unsafe for operation.

- In the event of a malfunction, do not attempt to use the sterilizer until necessary repairs have been made.
- Do not attempt to disassemble sterilizer, replace malfunctioning or damaged components, or perform adjustments unless you are one of Midmark's authorized service technicians.
- Do not substitute parts of another manufacturer when replacing inoperative or damaged components. Use only Midmark replacement parts.

© Midmark Corporation 1999 SF-1597

Printed in U.S.A.

TABLE OF CONTENTS

© Midmark Corporation 1999 SF-1597

Printed in U.S.A.

SECTION I
GENERAL INFORMATION

1.1 Description Of M 4•9 Easyclave™ Sterilizer

A. General Description (See Figure 1-1).

The M 4•9 EasyClave™ Sterilizer is to be used in medical and dental offices, hospitals, clinics, nursing homes, laboratories, and other facilities to sterilize heat and moisture stable reusable items (including dental handpieces) that are compatible with steam sterilization at 270°F (132°C). Follow state and federal guidelines for sterilization of single use devices.

The major serviceable components of the sterilizer are (refer to Figure 1-1, Major Components).

Door Pulse Solenoid (1)
Door Pulse Solenoid is held in closed (latched) position during sterilizer operation and automatically unlatches after vent mode. Controlled by main control p.c. board.

Door Latch Interlock Switch (2)
Monitors position of door assembly. A normally open switch that closes when door is closed. Prevents Initiating a Cycle unless door is closed.

Axial Flow Fan (3)
Thermostatically controlled fan for circulating air, in area between chamber and inside of panels, to decrease heat and condensation.

Fan Thermostat (4)
Controls Off / On of Axial Flow Fan. Normally open, bimetal, auto-reset, thermostat that automatically closes contacts at 122°F (50°C) to 138°F (59°C) to power Fan. Thermostat opens at 95°F (35°C) to 106°F (41°C), removing power, stopping Fan.

Air Solenoid Valve (5)
Removes air from chamber during operation. Controlled by main control p.c. board.

Steam (Side) Temperature Probe (6)
Temperature probe inside chamber monitors internal chamber temperature during operation and transmits it back to main p.c. board. Steam Probe is located in lower front right side of chamber.

Auxiliary (Lower, Trough) Temperature Probe (7)
Located inside chamber in water trough. Senses temperature near lower heating element and transmits it back to main control p.c. board.

Main Control P.C. Board (8)
Contains the program logic, EPROM, and various connections to send and receive data to operate the various programs. SW2 dip switch assembly is located on top, right corner of board. Service Diagnostics, calibrations, and various display options can be accessed by changing switch positions.
Fuses F1 and F2 protect the main control p.c. board should a problem exist in the transformer or related components.
Fuse size is 1.6 Amp, 250 VAC, Slowblo, 3/16" D. x 13/16" L.

Auxiliary (Upper) Hi-Limit Switch (9)
Controls power to heating elements should overheat conditions exist.
Normally closed, bimetal, thermostat that automatically opens contacts at 450°F (232°C) to 500°F (260°C) removing power to heating elements.
Automatically resets to close position at 370°F (188°C) to 420°F (216°C).
Located on upper front, outside surface of chamber.

Lower Hi-Limit Switch (10)
Controls power to heating elements should overheat conditions exist.
Normally closed, bimetal, thermostat that automatically opens contacts at 450°F (232°C) to 500°F (260°C) removing power to heating elements.
Automatically resets to close position at 370°F (188°C) to 420°F (216°C).
Located on lower front, outside surface of chamber.

Transformer (11)
Steps line voltage down to 18.5 VAC to power the main control p.c. board.
Can be used with 115 VAC or 230 VAC supply voltage.

Main Fuse (12)
Protects sterilizer electrical circuit. 115 VAC Sterilizer fuse is a 15 Amp, 600 VAC, 3AB Fast Acting, 13/32” D. x 1 1/2" L.
The 230 VAC Sterilizer fuse is the same style but rated at 8 amp.

Solid State Relay (13)
Solid state switch that closes when 12 VDC is supplied from the main control P.C. Board to relay terminals 3 and 4.
With the relay operating, line current can pass thru (terminals 1 and 2) to common terminal of Main Relay.
Depending if Main Relay is operated, current will be supplied to both heaters (auxiliary heat) or just the lower (steam) heater.
Solid State Relay opens and closes, turning on and off the heater(s), to control temperature in chamber.

© Midmark Corporation 1999 SF-1597 Rev. 5/02

Printed in U.S.A.

SECTION I
GENERAL INFORMATION

Main Relay (14)
Main Relay contains a set of Normally Open (NO) and Normally Closed (NC) contacts that allow one (Steam, lower) or both (Auxiliary, upper and lower) heaters to operate depending if its coil is being supplied with 12 VDC from main control P.C. Board.
When coil is energized (12 VDC) the contacts change position, supplying line voltage thru the SSR and the *closed* NO contacts to the Steam (lower) heater.
If the coil is not energized, the contacts remain in their normally closed positions. Line voltage is now supplied thru the SSR and the NC contacts to both the Upper and Lower heaters.

Water Level Sensor (15)
Located in back of chamber, it monitors the water level during the FILL cycle. When the water level reaches the sensor, a circuit is completed which signals the main control P.C. board to remove power from the Fill Valve solenoid, closing the valve.

Pressure Transducer (16)
Monitors pressure inside chamber and transmits signal back to main control p.c. board so conditions can be controlled inside chamber. If conditions are not within tolerances, specific Codes will be displayed to inform Operator.

Fill Valve (17)
Fill Valve is a normally closed valve. When START key is depressed K3 contacts on main control P.C. board close supplying line voltage to the Fill Valve solenoid. Normally closed valve opens, allowing water to enter chamber. When water level reaches sensor a circuit is complete. P.C. Board opens K3 contacts, removing power from Fill Valve solenoid coil, closing the valve.

Vent Valve (18)
Vent Valve is a Normally Open valve.Controlled by main control P.C. board. When K2 contacts close Vent Valve solenoid energizes, closing the valve. Valve vents back thru condensing coil in reservoir.

Lower (Steam) Heating Element (19)
Submersible, tubular, 1550 watt, heating element used to generate steam for unit.
During the Heatup and Sterilization cycles, the Steam temperature probe, monitors internal chamber conditions, sending signals back to main control P.C. board which controls On / Off cycling of heater thru the Solid State Relay (SSR).

Upper Heating Element (20)
Upper element is wired in series with lower element to maintain conditions inside chamber during DRY and Preheat cycles.

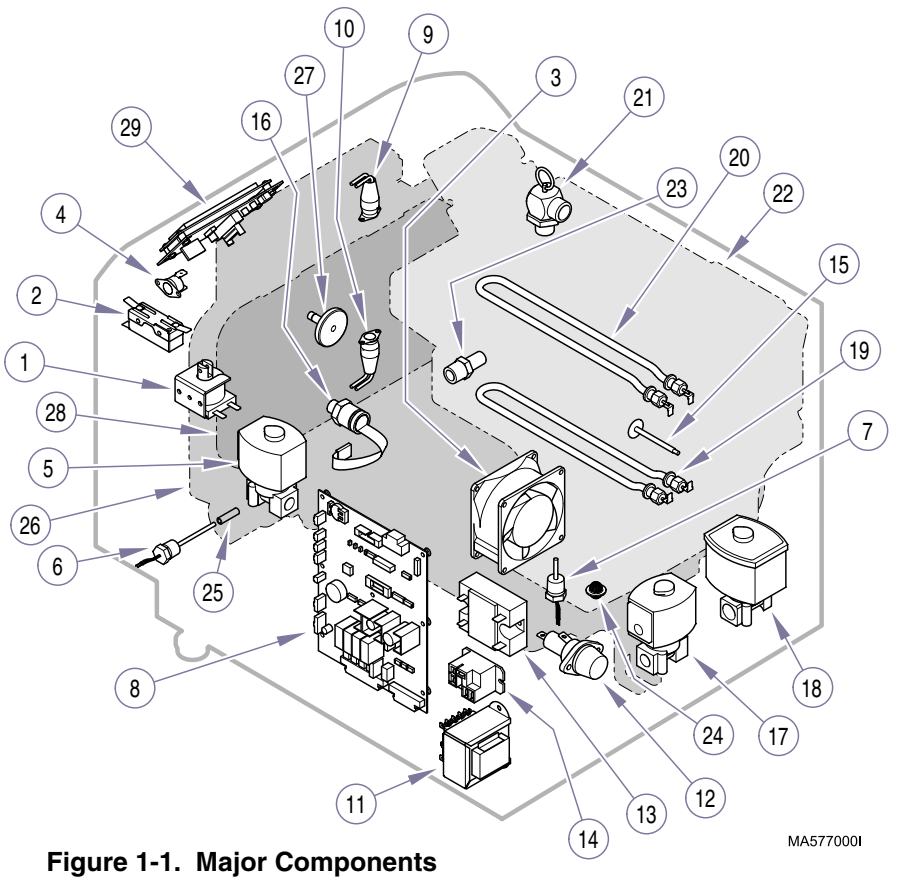

Figure 1-1. Major Components

With the Main Relay not energized, line voltage is supplied thru the SSR and NC contacts of the Main Relay to both heaters.
Lower and Upper temperature probes monitor internal chamber conditions sending signal back to main P.C. board which controls On / Off cycling of both heaters by opening and closing the SSR.

Pressure Relief Valve (21)
Safety valve vents chamber should pressure inside chamber reach 40 PSIG (275.8 kPa). Steam is vented out below base of sterilizer.

Reservoir Tank w/ Condensing Coil (22)
Retains supply of distilled water for operation. During Vent cycle steam is discharged from chamber back thru condensing coil into reservoir.

Vent Muffler (23)
Located inside reservoir at end of Air Valve line. Used to supress exhaust noise during operation. Periodically inspect muffler for restriction to assure proper operation.

Filter Screen (24)
Fine stainless steel mesh, screen for filtering particals from system preventing migration to Vent Valve. Filter should be cleaned monthly.

Internal Filter Screen (25)
Fine stainless steel, mesh, tubular screen for filtering particals from system preventing migration to Air Valve and Pressure Transducer. Filter should be cleaned monthly.

Pressure Vessel (26)
Includes chamber and door assembly which are ASME certified.

Door Interlock Plunger (27)
Plunger device, installed in center of door assembly that prevents unlatching and opening door. Operated by internal chamber pressure. Locks at 2 PSIG (13.8 kPa).

Door Gasket (28)
Seals door when in latched position to prevent pressure from escaping around door during operation.

Display / P.C. Board (29)
Operation and Service Diagnostic messages are viewed though use of a liquid crystal display (LCD) on front of top cover.

1.2 Specifications

Factual data for the M 4•9 EasyClave™ Steam Sterilizer is provided in Table 1-2.

Table 1-2. Specifications

Description	Data
Dimensions (overall):	
Width	15.3 in. (38.9 cm)
Depth	21.2 in. (53.8 cm)
Height (w/o printer)	15.9 in. (40.4 cm)
Height (w/ printer	16.3 in. (41.4 cm)
Chamber Size:	4.5 in. “H” x 9 in. “W” x 12 in. “D” (11.4 cm x 22.9 cm x 30.5 cm)
Shipping Carton: 24.25 in. "L" x 20.5 in. "W" x 21 in. "H" (61.6 cm x 52.1 cm x 53.3 cm)	
Weight:	
With Reservoir Empty	82.0 lbs (37.2 kg)
Shipping weight w/ skid	115.0 lbs (52.2 kg)
Water Reservoir Capacity	Apprx. 1.0 gallon (3.8 Liters) to full mark
Electrical Requirements:	
115 VAC Unit	115 VAC, 50/60 HZ 12 amp, single phase
230 VAC Unit	230 VAC, 50/60 HZ 6.5 amp, single phase
Power Consumption:	
115 VAC Unit	1550 Watts, 12 amps @ 120 VAC
230 VAC Unit	1550 Watts, 6.5 amps @ 240 VAC
Recommended Circuit: A separate (dedicated) circuit is recommended for this sterilizer. Sterilizer *should not* be connected to an electrical circuit with other appliances or equipment unless circuit is rated for the additional load.	
Certifications:	AAMI ST55 ASME Boiler & Pressure Vessel Code UL3101-1
Chamber Pressure:	
Operating	27-31 psi (186-215 kPa)
Maximum Before Safety Valve Opens	40 psi (275.8 kPa)
Chamber Temperature:	
Operating	270 - 275° F (132 - 135° C)

1.3 Parts Replacement Ordering

If a part replacement is required, order the part directly from the factory as follows:

(1) Refer to Figure 1-2 to determine the location of the model number and serial number of the unit and record this data.

NOTE
To assure expedient service and correct parts you must have the correct ***Model and Serial Number*** of the Sterilizer.

(2) • Refer to the Parts List to determine the item numbers of the parts, part numbers, descriptions, and quantities of parts needed and record this data.
• Determine installation date of sterilizer and record this data.
• Call Midmark (1-800 643-6275) and ask for Technical Service Department. Please have the ***Model and Serial Number*** of the sterilizer.
• See back cover of this manual for the phone number or use the Fax Order Form (See page 7-2 for Fax Order Form).

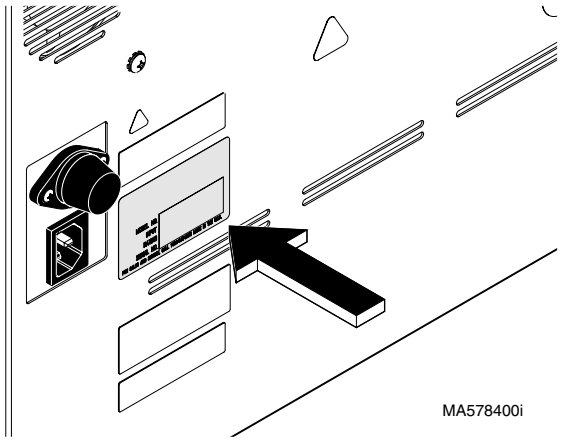

Figure 1-2. Model / Serial Number Location

1.4 Special Tools

Table 1-3 lists all special tools needed to repair the sterilizer, how to obtain the tools, and purpose of each.

Table 1-3. Special Tool List

Description of Special Tool	Manufacturer	Manufacturer's Part Number	Purpose of Special Tool
Digital Multimeter w/ Amp Clamp (capable of displaying 3 digits)	Commercially Available	Any Type	For performing continuity, voltage, and current checks.
Punch (3/32" diameter)	Commercially Available	Any Type	For removal of roll pin that secures latch lever to pulse solenoid.
Digital Thermometer	Commercially Available	Any Type	Used to check temperatures in order to diagnose malfunctions.
Pressure Gauge Test Harness	Midmark Corporation 1-800 643-6275 Technical Service Dept.	002-0372-00	Used to check pressure in chamber during a cycle in order to diagnose malfunctions.
Combination Square (12" Rule)	Commercially Available	Any Type	For Adjustment of Door Latch Interlock Switch
Thermal Joint Compound	Commercially Available	Obtain at Radio Shack	Heat dissipation on Solid State Relay (SSR).

© Midmark Corporation 1999 SF-1597 Rev. 4/02

Printed in U.S.A.

SECTION II
TESTING AND TROUBLESHOOTING

2.1 Operational Test (See Figure 2-1)

In order to effectively diagnose a malfunction of sterilizer, it may be necessary to perform an operational test as follows:

WARNING
Refer to Operator Manual for complete instructions on operating sterilizer. Failure to do so could result in personal injury.

NOTE
Operational Test, for most part, only describes what should happen when sterilizer is operated. If sterilizer does something other than described, a problem has been discovered. Refer to Troubleshooting Guide to determine cause of problem and its correction.

WARNING
Use 220 - 240 VAC, 50 / 60 HZ alternating current only for 230 VAC models and 110 - 120 VAC, 50 / 60 HZ alternating current only for 115 VAC models. Failure to do so could result in electrical shock to personnel and will result in damage to sterilizer.

Do not use this sterilizer in an explosive or oxygen-enriched atmosphere. Failure to do so could result in serious personal injury or death.

(1) Plug sterilizer power cord into a grounded, non-isolated, correctly polarized outlet, that has proper voltage for sterilizer.

NOTE
Grounding reliability can only be achieved if unit is connected to a matching three-pronged, grounded, non-isolated, correctly polarized receptacle.

(2) **Electrical rating for 115 VAC Sterilizer:**
115 VAC, 50 / 60 Hz, 12 amps
Connect to a dedicated branch circuit rated for 115 VAC, 50 / 60 Hz, 15 amps minimum.
Electrical rating for 230 VAC Sterilizer:
230 VAC, 50 / 60 Hz, 6.5 amps
Connect to a dedicated branch circuit rated for 220 VAC, 50 / 60 Hz, 10 amps.
Check label on back panel to verify electrical specifications required for unit.

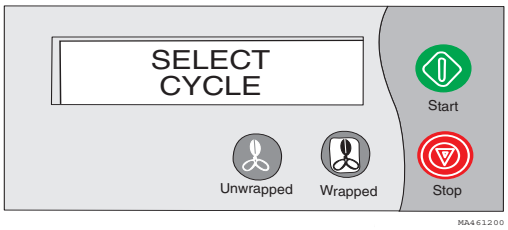

Figure 2-1. Display and Operator Control Pad

(3) Table 2-1, Operational Chart, describes a complete cycle during Normal operation, identifying audible signals, various display prompts and component operation.

© Midmark Corporation 1999 SF-1597

Printed in U.S.A.

SECTION II
TESTING AND TROUBLESHOOTING

Normal Operation. Table 2-1.

Unit Plugged Into Outlet

Audible	Display	Action / Notes
Audible beeps	**INITIALIZING CYCLE**	**Note:** The fan may run if the temperature inside cabinet is 130°F (+/- 8°F) (54°C). or greater.
	TOTAL CYCLES X VER X . XX	Display shows total amount of cycles that have been run. (VER is the software version number).
	SELECT CYCLE CHAMBER PREHEATED *	*If a cycle has previously been run display will also indicate CHAMBER PRE-HEATED.

Press Cycle Key (i.e.: UNWRAPPED) or (WRAPPED)

Audible	Display	Action / Notes
	UNWRAPPED 270° F 3:30 MINUTES	**NOTE:** Pressing **WRAPPED** button, display time for sterilization cycle will be 9 MINUTES.

Press START Key

Audible	Display	Action / Notes
Note: At Apprx. 271°F (133°C) and 28 Psi (193 kPa) countdown begins.	**FILLING CHAMBER**	K3 contacts close on Main Control P.C. Board, Fill Valve solenoid coil energizes, opening valve. Water from reservoir enters chamber. K2 (Vent) contacts close, energizing Vent Valve solenoid coil, closing the normally open valve. At same time, K4 contacts close, energizing Air Valve solenoid coil, opening normally closed valve. Main Relay coil energizes, changing the positions of the contacts. Normally open contacts close and normally closed contacts open. Solid State Relay (SSR) is not energized, contacts are open and heaters do not operate.
	CHAMBER IS FULL	Water reaches level of Water Level Sensor sending signal back to main P.C. board. K3 contacts on Main Control P.C. Board open, Fill Valve closes stopping water flow into chamber.
	HEATING - UNWRAPPED XXX °F XX.X PSI (temp.) (pressure)	Solid State Relay (SSR) energizes closing its normally open contacts. With Main Relay, N/C contacts opened and N/O contacts closed, power is applied to Steam Heater. Air Valve, being open, allows air to be expelled from chamber. When temperature reaches 210°F (99°C) K4 contacts open and Air Valve closes allowing pressure to build up. Air Valve will open at 6 Psi (41 kPa) and 22 Psi (152 kPa) and may also open at 10, 14, & 18 Psi (69, 97, and 124 kPa).
	STERILIZING XX : XX XXX°F XX . X PSI (time) (temp.) (pressure)	Sterilization Time (3 1/2 min. Unwrapped or 9 min. Wrapped) counts down. RTD Temperature probes and Pressure Transducer monitor temperature and pressure. K4 contacts and Air Valve may open and close while steam heater is cycled on and off by Solid State Relay (SSR) to maintain temp. / pressure.
	READY TO VENT XX . XX XXX °F XX . X PSI (time) (temp.) (pressure)	10 seconds before end of STERILIZING cycle “READY TO VENT” is displayed.
	VENTING CHAMBER XXX °F XX.X PSI (temp.) (pressure)	Main Control P.C. board K2 relay contacts Open, removing power from Vent Valve solenoid, returning Vent Valve to normally open position. Chamber vents.
Audible beeps (Occurs 5 seconds before Door opens.)	**DOOR TO OPEN** XXX °F XX . X PSI (temp.) (pressure)	Main Control P.C. board K5 relay contacts close. Door Pulse solenoid energizes for just 1/2 second, releasing door latch. Door opens to partially open position.
	ITEMS STERILIZED **DRY CYCLE XX:XX** (time counts down from 20 to 40 min.)	Main Relay is OFF, contacts are in their normally open and normally closed position. SSR cycles open & closed turning Auxiliary (Upper) and Steam (Lower) heaters On and Off to maintain temp. in chamber during drying cycle. Drying Cycle time is varible between 20 and 40 Minutes.
Audible beeps	**DRY CYCLE COMPLETE** SELECT CYCLE CHAMBER PREHEATED	Open door completely and remove contents. Unit is ready for next sterilization cycle. For 90 minutes, if no other cycle is initiated, SSR will open and close. With Main Relay Off, current flows thru Main Relay N/C contacts energizing Auxiliary (Upper) and Steam (Lower) heaters to maintain preheat temperature at 212°F (100°C). After 90 minutes, if no cycle has been initiated, power is removed.

© Midmark Corporation 1999 SF-1597

Printed in U.S.A.

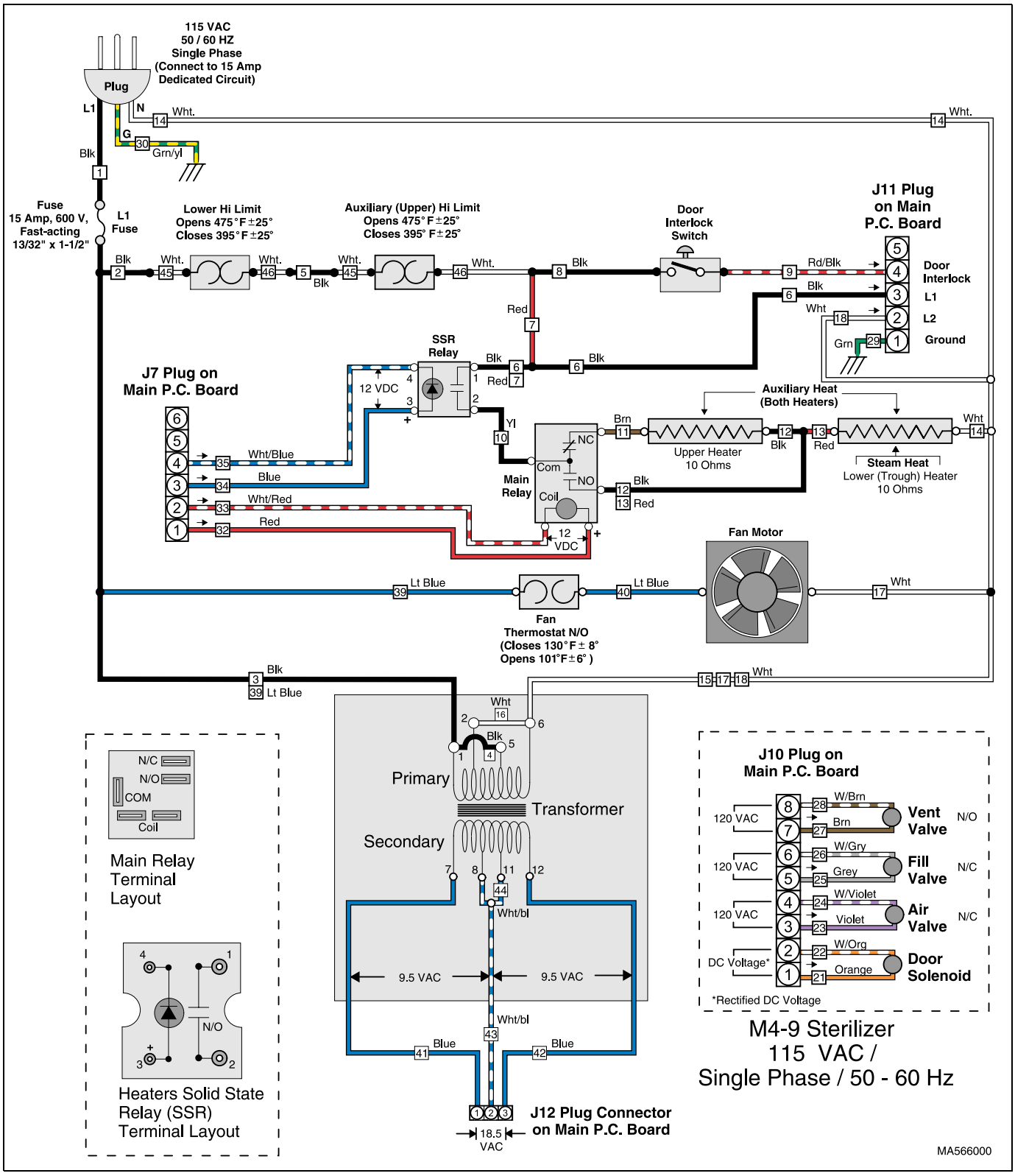

Figure 2-2. Schematic

2.2 Service Diagnostics

EQUIPMENT ALERT
Always complete Service Diagnostics (Section 2.2) before replacing any major components especially the Main P.C. Board.

Service Diagnostics allows testing various components of sterilizers through use of operator buttons, display unit and LED's on Main P.C. board. It will be necessary to remove the panels of the sterilizer in order to view the various LED's.

WARNING
Unplug unit from electrical outlet to prevent possibility of personal injury or death from electrical shock.

(1) Unplug unit from electrical outlet.

(2) Remove panels (Refer to para 4-2).

NOTE
SW2, Dip Switch Assembly is located on upper, right corner of Main P.C. Board.

(3) Place SW2 Switch 1 (Figure 2-3) in *ON* (left) position.

WARNING
Use extreme caution when unit is plugged into outlet to prevent possibility of personal injury from electrical shock.

(4) Plug unit into outlet.

(5) Use Table 2-2 to perform the Service Diagnostics.

NOTE
Refer to Section 5 for Electrical Schematics / Wiring Diagrams.

(6) Unplug unit from electrical outlet.

(7) Place dip switch 1 (Figure 2-3) located on SW2 on Main P.C. board in *OFF* (right) position for normal operation.

(8) Install panels.

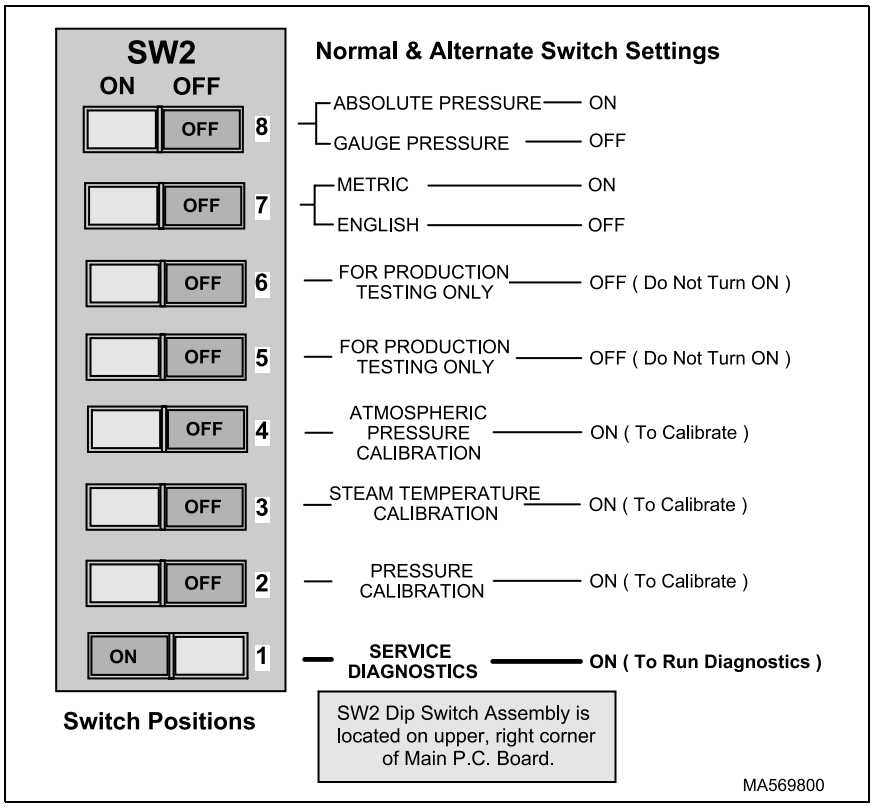

Figure 2-3. Dip Switch Assembly (SW2)

Service Diagnostics. Table 2-2.

Table 2-2. Service Diagnostics (Refer to Schematic Fig. 2-2).

Audible	Display	Action / Notes	
Audible beeps	**INITIALIZING CYCLE** **TOTAL CYCLES XX** **VER X . XX**	Plug unit into outlet. Display shows total amount of cycles that have been run. (VER is the software version number).	
	SERVICE DIAGNOSTIC **<START> I/O TEST** **<STOP> RECALL ERRORS**	**Press START**	**Press STOP**
Audible beep when button is depressed.	**PRESS** **(UNWRAPPED) BUTTON** 	For testing button, when depressed an audible beep should occur if button is functioning correctly.	**ERROR 1: CXXX 2: CXXX** **3: CXXX 4: CXXX 5: CXXX** **NOTE:** Last 5 Error Codes are displayed with the number 1 being the most recent code. **<START> TO ZERO** Pressing START clears all Codes. **<STOP> FOR NEXT TEST** Press **STOP** (Does Not clear codes) **END DIAGNOSTIC TEST** **UNPLUG/RE-PLUG UNIT** **STEAM AUX PRESS** **XX.X F XX.X F XX.X P** **NOTE:** Pressure displayed is determined by SW2 switch setting #7 and #8 for PSIG, PSIA, or kPa. Temperature displayed is °F or °C depending on switch setting #7.
Audible beep when button is depressed.	**PRESS** **(WRAPPED) BUTTON** 	For testing button, when depressed an audible beep should occur if button is functioning correctly.	
Audible beeps whenever START or STOP buttons are depressed. Valve will emit a “clicking” sound when operated.	**AIR VALVE TEST** **(START) TO TOGGLE** **(STOP) FOR NEXT TEST**	This function checks operation of Air Valve and related L1 Fuse, and K4 relay contacts on P.C. board. **Press START once.** K4 relay contacts close and the K4 LED illuminates. Power is applied to solenoid of AIR valve opening valve. **Press START again**. K4 relay opens and K4 LED goes out. Solenoid of AIR valve deenergizes returning valve to Normally Closed position. **Press STOP** to go to VENT VALVE test.	
Audible beeps whenever START or STOP buttons are depressed. Valve will emit a “clicking” sound when operated.	**VENT VALVE TEST** **(START) TO TOGGLE** **(STOP) FOR NEXT TEST**	**NOTE:** VENT VALVE is a Normally Open valve. Power must be applied to valve solenoid to Close valve. This function checks operation of Vent Valve and related L1 Fuse, and K3 relay contacts on P.C. board **Press START** once. K2 relay contacts close and K2 LED illuminates. Power is applied to solenoid of VENT valve closing valve. **Press START** again. K2 relay opens and K2 LED goes out. Solenoid of VENT valve deenergizes returning valve to Normally Open position. **Press STOP** to go to FILL VALVE test.	

Table 2-2. Service Diagnostics (Refer to Schematic Fig. 2-2).

Audible	Display	Action / Notes
Audible beeps whenever START or STOP buttons are depressed. Valve will emit a "clicking" sound when operated.	**FILL VALVE TEST** **(START) TO TOGGLE** **(STOP) FOR NEXT TEST**	**WARNING:** Pressing START button energizes (Opens) FILL valve allowing water to flow into chamber. Water Level Probe does not function during test. Water can overflow from chamber unless START button is pressed again or STOP button is pressed terminating test. This function checks operation of Fill Valve and related L1 Fuse, and K3 relay contacts on P.C. board. **Press START once.** K3 relay contacts close and K3 LED illuminates. Power is applied to solenoid of FILL valve, opening valve, water begins to fill chamber. **Press START again.** K3 relay opens and K3 LED goes out. Power is removed from Fill Valve solenoid returning valve to Normally Closed position. **Press STOP** to go to DOOR OPEN test.
Audible beeps whenever START or STOP buttons are depressed.	**DOOR OPEN TEST** **(START) TO OPERATE** **(STOP) FOR NEXT TEST**	**WARNING:** Door will immediately go to partially open position from closed position when START button is depressed. Checks operation of Door Pulse Solenoid and related L1 Fuse, and K5 relay contacts on P.C. board. **Press START.** K5 relay contacts close and K5 LED illuminates . Power is briefly (1/2 second) applied to Door Pulse Solenoid, door springs to partially open position. K5 relay opens, removing power from K5 LED and Door Pulse Solenoid. **Press STOP** to go to MAIN RELAY test.
Audible beeps whenever START or STOP buttons are depressed.	**MAIN RELAY TEST** **(START) TO TOGGLE** **(STOP) FOR NEXT TEST**	Checks operation of Main Relay coil, N/O, N/C contacts and L1 Fuse. **Press START**. Power is supplied thru P.C. board thru Plug J7 to coil of Main Relay energizing it. Normally Open and Normally Closed contacts change condition, Open contacts close and Close contacts open. MAIN LED on P.C. board at Plug J7 illuminates. **Press START** again to change back to normal unenergized condition **Press STOP** to go to STEAM HEATER test.
Audible beeps whenever START or STOP buttons are depressed.	**STEAM HEATER TEST** **(START) TO TOGGLE** **(STOP) FOR NEXT TEST** (Checks Lower Heater) **Note:** Amperage draw when Steam heater is powered is approximately 12 Amps.	**WARNING:** There is a 15 second maximum timing period that the heater will be energized before it shuts off. To restart press START. Do not restart cycle more than twice before allowing unit to cool for apprx. 5 minutes. Checks operation of Steam (Lower) Heater and related L1 Fuse, Upper and Lower Thermostat O/L's, Solid State Relay (SSR), and Main Relay. **Press START**. 12 VDC Power is supplied thru P.C. board thru Plug J7 to coil of Main Relay, energizing it, N/O contacts close. 12 VDC is also supplied thru Plug J7 to Solid State Relay (SSR) (3 & 4) closing it. Line power is supplied thru the L1 fuse, N/C upper and lower thermostat O/L's thru the SSR closed contacts (1 & 2) to the Common terminal of Main Relay. With Main Relay N/O contacts closed current flows to Steam (Lower) Heater. Main Relay and SSR Steam Relay LED's on P.C. board at Plug J7 illuminate. SSR Steam LED on P.C. board at Plug J7 illuminates. Heater remains energized for a 15 second time period before it automatically turns off. To restart test depress **START**. **Press STOP** to go to AUXILIARY HEATER test.

© Midmark Corporation 1999 SF-1597

Printed in U.S.A.

Table 2-2. Service Diagnostics (Refer to Schematic Fig. 2-2).

Audible	Display	Action / Notes
Audible beeps whenever START or STOP buttons are depressed.	**AUXILIARY HEATER TEST (START) TO TOGGLE (STOP) FOR NEXT TEST** (Checks Both Heaters) **Note:** Amperage draw when Both heaters are powered is approximately 6.5 Amps.	**WARNING:** There is a 15 second maximum timing period that the heater will be energized before it shuts off. To restart press START. Do not restart cycle more than twice before allowing unit to cool for apprx. 5 minutes. Checks operation of both Auxiliary and Steam Heaters, L1 Fuse, Upper and Lower Thermostat O/L's, Solid State Relay (SSR), and Main Relay. **Press START.** 12 VDC is supplied thru Plug J7 to Solid State Relay (SSR) (3 & 4) closing it. Line power is supplied thru L1 fuse and N/C Upper and Lower Thermostat O/L's thru the SSR closed contacts to the Common terminal of Main Relay. With Main Relay N/C contacts closed current flows thru the Relay contacts to the Auxiliary (Upper) Heater and then to the Steam (Lower) Heater. SSR Surface LED on P.C. board at Plug J7 illuminates. Heaters remain energized for 15 seconds before automatically turning off. To restart test depress **START**. **Press STOP** to go to TEMPERATURE / PRESSURE DISPLAY & END DIAGNOSTIC TEST.
	STEAM AUX PRESS **XX.X F XX.X F XX.X P** **END DIAGNOSTIC TEST** **UNPLUG/RE-PLUG UNIT**	Checks Steam (Side) and Auxiliary (Trough) Temperature Sensors and Pressure. Displays temperature in °F or °C depending on setting of SW2, switch #7. Should the particular sensor be open, shorted, or have a disconnected lead, display will indicate a 32°F or 0.0°C reading. Sensor plugs are located on P.C. Board at J3 for Auxiliary (Trough) Sensor and J5 for Steam (Side) Sensor. **NOTE: When Service Diagnostics has been completed:** **Unplug unit** **Position SW2, Switch #1 to OFF position** **Install covers** **Plug in unit.**

2.3 Steam and Pressure Calibration.

When replacing a Steam temperature sensor (RTD), pressure transducer or main P.C. board it will be necessary to assure the components and system are calibrated. Use the following steps and tables to calibrate the system. Table 2-3 is for Temperature Calibration and Table 2-4 is for Pressure Calibration.

NOTE
When a Lower Temperature Probe is replaced, calibration is not required.

When changing a P.C. Board:

You must have the Pressure Span, Pressure Offset, and Steam Offset calibration data from P.C. Board being replaced. This information can be obtained two ways:

(1) Documentation is supplied with sterilizer

(2) Use SW2 dipswitches #2 and #3 to recover data before replacing P.C. Board:

a.) Dipswitch #2: Pressure Span and Offset.
b.) Dipswitch #3: Steam Offset.

(3) After P.C. Board has been replaced re-enter old calibration data:

(4) Use SW2 dipswitch #2 to enter Pressure Span and Pressure Offset data. (Refer to Table 2-4).

(5) Use SW2 dipswitch #3 to enter Steam Offset data. (Refer to Table 2-3).

If a Pressure Transducer or Steam Temperature Probe is being replaced:

NOTE
Calibration data is shipped with the new component but it is a good idea to record the old data from the system before replacing the component.

(1) Recover the old data from the unit using SW2 dipswitch #2 (Pressure) and #3 (Temperature) and record for reference.

(2) Replace the component (Transducer or Temp. Probe).

(3) Enter the new calibration data that came with the component using the appropriate SW2 dipswitch, #2 for Pressures, #3 for Temperature.

© Midmark Corporation 1999 SF-1597

Printed in U.S.A.

Table 2- 3

Steam (Side) Temperature Calibration (SW2 #3 Switch)	
Display	**Action**
	WARNING: Unplug Unit. Place SW2 dip switch **#3 ON**. (All other dip switches should be **OFF**).
INITIALIZING SYSTEM **OFFSET: +0.000 °C** **CURRENT STEAM TEMP CALIBRATION DATA** **PLEASE RECORD *** **<START> TO CONTINUE**	Plug Unit in. (**IMPORTANT***: Always record the displayed Offset Temperature [+0.000 °C]) Press **START** Button
STEAM TEMP OFFSET +0.00X °C **<UNWRAP> -0.1 C** **<WRAPPED> +0.1 C** **<STOP> TO CANCEL** **<START> TO SAVE**	To change the Steam (Side) Offset Temperature depress the **UNWRAP** or **WRAP** button: Each time **UNWRAP** is depressed, increases reading 1 digit. Depressing **WRAP** advances cursor to next digit (0.000). Pressing **STOP** here will **cancel** saving STEAM TEMP OFFSET data. Pressing **START** here will **save** STEAM TEMP OFFSET data.
STEAM TEMP CALIBRATION MODE SUCCESSFUL **UNPLUG / RE-PLUG UNIT** **<UNWRAP> -0.1 C** **<WRAPPED> +0.1 C** **STEAM TEMP CALIBRATION MODE CANCELLED** **UNPLUG / RE-PLUG UNIT**	Display after **START** was depressed Display after **STOP** was depressed **IMPORTANT:** Place SW2 dip switch **#3** back to **OFF** position.

© Midmark Corporation 1999 SF-1597

Printed in U.S.A.

Table 2- 4

Pressure Calibration (SW2 #2 Switch)	
Display	**Action**
	WARNING: Unplug Unit. Place SW2 dip switch **#2 ON**. (All other dip switches should be **OFF**).
INITIALIZING SYSTEM **SPAN: +1.000** **OFFSET: +0.000 KPA** **CURRENT PRESSURE CALIBRATION DATA** **PLEASE RECORD*** **<START> TO CONTINUE**	Plug Unit in. (**IMPORTANT**: Always Record the displayed SPAN [+1.000] and OFFSET [+0.000 KPA].) Press **START** Button
PRESSURE SPAN **+ 1.000** **<UNWRAP> INCR. DIGIT** **<WRAP> NEXT DIGIT** **<STOP> TO CANCEL** **<START> TO SAVE**	To change the Pressure Span depress the **UNWRAP** or **WRAP** button : Each time **UNWRAP** is depressed, increases reading 1 digit. Depressing **WRAP** advances cursor to next digit (0.000). Pressing **STOP** here will **cancel** ALL saving data. Pressing **START** here will **save** ONLY Pressure Span data.
PRESSURE OFFSET **+0.000 KPA** **<UNWRAP> INCR. DIGIT** **<WRAP> NEXT DIGIT** **<STOP> TO CANCEL** **<START> TO SAVE**	To change the Pressure Offset depress the **UNWRAP** or **WRAP** button : Each time **UNWRAP** is depressed, increases reading 1 digit. Depressing **WRAP** advances cursor to next digit (0.000). Pressing **STOP** here will ONLY **cancel** saving Offset data. Pressing **START** here will **save** ONLY Pressure Offset data.
PRESSURE CALIBRATION MODE SUCCESSFUL **UNPLUG / RE-PLUG UNIT** **SPAN +1.000** **OFFSET +0.000 KPA**	Display after **START** was depressed
PRESSURE CALIBRATION MODE CANCELLED **UNPLUG / RE-PLUG UNIT**	Display after **STOP** was depressed **IMPORTANT:** Place SW2 dip switch **#2** back to **OFF** position.

© Midmark Corporation 1999 SF-1597

Printed in U.S.A.

2.5 Troubleshooting Procedures

Table 2-5 is a Troubleshooting Guide which is used to help to determine the cause of a malfunction.

Refer to Section V Schematics and Diagrams for tracing circuits and referencing points in Troubleshooting Guide.

Error Categories (Severity)

There are 4 categories of errors in the M4•9 software:

Automatic Errors:
Minor problem causing Operator to do something such as close the door, etc. Once cleared the software continues on where it left off.

Fast Restart Errors:
• Possible problems with M4•9 control system or with producing an effective sterilization cycle.

•May be due to something the Operator did such as pressing the STOP button during a sterilization mode.

•Could also be due to temperature values being outside the normal range required as sensed by the Lower Temperature probe.

• Operator is prompted by display to press STOP button to Restart.
Software will abandon the sterilization cycle and return to SELECT CYCLE / PREHEAT MODE.

Restart Errors:
• Like Fast Restart, indicates possible problems with M4•9 control system or with producing an effective sterilization cycle.

• Operator is prompted to press the STOP button, abandoning the sterilization cycle.

Pressing the STOP button will stop the audible signal but 60+ seconds must pass since the condition was indicated and the pressure inside the chamber must be equal to or below 5 Psig (34.5 Kpa) before it returns to SELECT CYCLE / PREHEAT MODE to allow starting another cycle.

Fatal Errors
• This would indicate possible serious problems with the M4•9 control system.

• Pressing the STOP button before 60 seconds (when it turns off automatically) will silence the audible signal but the Power must be disconnected to clear the error code display.
Unit should not be ran until a trained Service Technician has repaired the malfunction.

NOTE
In the Troubleshooting Guide, Table 2-5, the Type of Error Category of the specific Code will be included on the chart.

EQUIPMENT ALERT
Always complete Service Diagnostics (Section 2.2) before replacing any major components, *especially the Main P.C. Control Board.*

WARNING
Use extreme caution when testing components with Sterilizer plugged into outlet. Line voltage is present. Failure to comply could result in personal injury.

Table 2-5. Troubleshooting Guide

Problem	Display / Symptom	Probable Cause	Check	Correction
(Non-Coded Errors) **Sterilizer has no power.**	When depressed Touch-pad or Display do not work.	Sterilizer is not plugged in.	Check that power cord is plugged into sterilizer and/ or outlet.	Plug power cord into sterilizer and/or outlet.
		No power at outlet	Check for voltage at outlet.	Reset circuit breaker. Assure outlet is on dedicated circuit capable of handling ster-ilizer power requirements.
		Main (L1) Fuse blown on back of unit.	Check continuity of fuse.	Replace fuse with same style and rating.
		Transformer has Open windings.	Check for line voltage at pins 1 & 6 on primary side of transformer.	If 18.5 VAC is not present on secondary side when line volt-age is present on primary side, replace Transformer (Refer to para 4.17).
Touch pad and dis-play do not work. Sterilizer has power.	There is no display and touch pad does not work.	Plug on pin connection J12 on Main P.C. board has come loose.	Check condition of con-nector on J12 of Main P.C. board.	Plug connector into J12 on Main P.C. board.
		Wire harness from Trans-former and J12 pin con-nection has broken wire(s).	Check continuity of wire harness from transformer to J12 pin connection.	Repair or replace wire harness.
		Transformer has open or shorted winding.	Check for 18.5 VAC output on terminals 7 & 12 at transformer.	Replace transformer (Refer to para 4.17).
		Fuses F1 and F2 on Main P.C. board are blown or open.	Check continuity of fuses F1 and F2 with Ohm meter.	Replace fuses with same style and rating.
		Ribbon cable from J1 on Main P.C. board to J3 on Display P.C. board is dis-connected.	Check plug connectors of J1 on Main P.C. board and J2 on Display P.C. board.	Assure printer ribbon cable con-nectors are plugged in securely
		J1/ J3 ribbon cable has open lead(s).	Check continuity of J1/J2 ribbon cable.	Replace ribbon cable.
		Main P.C. Board is mal-functioning.	Check for 18.5 VAC on outlet side of F1/F2 fuses and 5 VDC on pin connec-tor J1 across pins 1 & 2, then across pins 15 & 16 (see Main P.C. Board dia-gram).	If voltage is present at F1/F2 but no voltage is present at J1 and leads between transformer sec-ondary and J12 have no broken connections replace Main P.C Board (Refer to para 4.22).
		Display P.C. Board is mal-functioning.	Check for 5 VDC betweeen R1and Ground on Display P.C. Board (see Main P.C. Board diagram).	If no 5 VDC is present replace Display P.C. Board (Refer to para 4.4).
No Display. Touch pads work. Sterilizer has power.	Displayed data is a line of undefined characters and intermitent beep continues.	Ribbon cable from J2 to touch pad is disconnected	Check J2 Plug connection.	Assure J2 Plug pins are aligned and connected securely.
		J2 ribbon cable to touch pad has open lead(s).	Check continuity of J2 rib-bon cable and touch pad.	Replace touch pad and ribbon cable assembly (Refer to para 4.5).

Table 2-5. Troubleshooting Guide

Problem	Display / Symptom	Probable Cause	Check	Correction
Unit will not fill.	Display: **CHAMBER VENTING BEFORE FILL**	Atmospheric pressure setting out of calibration.	Calibrate Atmospheric Pressure setting.	• Unplug Unit & Open Door. • Place SW2 dip switch #4 ON • Plug in Unit. • Displays: START TO ZERO. • Press START • Wait 1 - 2 minutes • Unplug unit. • Place SW2 dip switch #4 OFF • Plug in unit.
(Coded Errors) **Code C010.** (Type: *FAST RESTART*)	**C010: POWER UP MODE SYSTEM PWR LOSS** **ITEMS NOT STERILE PUSH STOP TO RESTART** Unit lost power for a few seconds during Fill, Heat Up, or Sterilization Mode. Also, if power was lost during the Vent Mode for a Temperature Regulation Warning.	Power interruption.	Check voltage supply to assure outlet is on a dedicated circuit with correct circuit breaker or fuse.	Plug unit into a dedicated circuit with correct circuit breaker or fuse. Refer to Specifications para 1.5). Power interruption could be due to an electrical storm, brown out, etc.
Code C060. (Type: *FATAL*)	**C060: POWER UP MODE SYSTEM HARDWARE** **ITEMS NOT STERILE * UNPLUG/RE-PLUG UNIT** *No message on this line unless power loss occurs during Fill, Heatup, Sterilization or Vent (only in case of a Temp Reg Warning). Also, if an error that occurred in one of these modes was not properly cleared before unit was Unplugged and Replugged into power source.	May be an internal glitch due to a brief interruption of power with components on P.C. Board (RAM, EEPROM, A/DC.	Check voltage supply to assure outlet is on a dedicated circuit with correct circuit breaker or fuse.	Plug unit into a dedicated circuit with correct circuit breaker or fuse. Refer to Specifications para 1.5). Power interruption could be due to an electrical storm, etc.
Code C102. (Type: *FAST RESTART* unless during Fill Mode, prompted by TEMP REG WARNING then it would be *RESTART*.)	**C102: FILL MODE STOP PRESSED** **ITEMS NOT STERILE * PUSH STOP TO RESTART** *No message on this line unless it occurs during Venting because of a Temp Reg Warning.	Operator pressed STOP button, terminating FILL Mode.	Check with person operating unit.	Explain proper operation.
Code C103 HEATUP **Code C104 STERILIZE** **Code C105 VENT** **Code C106 DOOR** (Type: *RESTART*)	*(Refer to column on left for codes and description)* **C10X: XXXXXX MODE STOP PRESSED** **ITEMS NOT STERILE* PUSH STOP TO RESTART** *No message on this line unless it occurs during Venting because of a Temp Reg Warning.	Operator pressed STOP button, terminating HEATUP Mode.	Check with person operating unit.	Explain proper operation.

Table 2-5. Troubleshooting Guide

Problem	Display / Symptom	Probable Cause	Check	Correction
Code C232 (Type: *RESTART*)	**C232: FILL MODE WATER LOW ITEMS NOT STERILE PUSH STOP TO RESTART** After door is closed or chamber vented, water fill (level) sensor did not detect water level within the 2 minutes required time period.	Reservoir water level low.	Check water level in Reservoir.	Add water to reservoir so that it is in the correct range on the water level label. Push STOP to restart back to SELECT CYCLE Mode.
		Mesh filter restricted.	Check if mesh filter is clogged.	Clean or replace mesh filter.
		Water Fill Level Sensor dirty.	Check Water Fill (level) Sensor for dirt or corrosion.	Clean or replace Water Fill (level) Sensor (Refer to para 4.33).
		Fill Valve or related plumbing clogged.	Check Water Fill Valve and related tubing for restricted or clogged.	Clean or replace Water Fill Valve (Refer to para 4.27).
		Fill Valve coil malfunctioning.	Check continuity of Water Fill Valve solenoid coil for open winding.	Replace Water Fill Valve (Refer to para 4.27).
		J6 Plug connection loose or disconnected or broken wires.	Check Water Fill Valve sensor plug connection at J6 on P.C. Board and related leads.	Assure J6 plug connector is securely connected and related leads are not broken.
		P.C. board malfunctioning.	• Check for 4.5 to 5.0 VDC at J6 pins 1 & 2 on P.C. Board. • Run a Service Diagnostics to check functions of Fill Valve and related components	If no voltage replace P.C. Board (Refer to para 4.22). **Always** run Service Diagnostics (Para 2.2) before replacing P.C. Board.
Code C326 (Type: *AUTOMATIC*)	**C326: DOOR MODE DOOR CLOSED OPEN DOOR** Door remains closed one second after door pulse solenoid energized. Door is Open but Code C326 is displayed.	Door may be hanging up on door pulse solenoid latch.	• Check position of door (open or closed). • Run Service Diagnostics and check operation of door pulse solenoid.	• Open door. • Run another cycle. If condition persist where door must be manually opened check door pulse solenoid for adjustment (Refer to para 4-21).
		Instrument(s) inside chamber depressing door interlock plunger.	Try opening door by lifting door handle. If handle does not move to open position door interlock plunger is stuck in locked position.	Remove panels and if necessary, drain water from reservoir then tilt unit back until instrument(s) slide away from plunger and door can be opened.
		Door Switch malfunctioning.	Check Door Switch contacts to assure they close when door is closed and open when door is opened.	Adjust Door Switch (Refer to para 4-20).
		P.C. Board malfunctioning.	Check for 115 VAC at J11, 3 (L2) & 4 (Door Interlock) terminals.	If voltage is present and problem persist replace P.C. Board (Refer to para 4-22). **Always** run Service Diagnostics (Para 2.2) before replacing P.C. Board.
Code C382 (Type: *AUTOMATIC*)	**C382: FILL MODE DOOR OPEN ITEMS NOT STERILE CLOSE DOOR**	Door Switch contacts opened during Fill Mode.	Check with person operating unit to see if door was opened as unit was filling.	Explain proper operation. Close door, cycle will continue where left off.
			Check Door Switch. Contact should be closed when door is in closed position.	If contact of Door Switch shows open when door is closed adjust or replace switch (Refer to para 4.20).

© Midmark Corporation 1999 SF-1597 Rev. (10/02)

Printed in U.S.A.

Table 2-5. Troubleshooting Guide

Problem	Display / Symptom	Probable Cause	Check	Correction
Code C383 (Type: *RESTART*)	**C383: HEATUP MODE DOOR OPEN** **ITEMS NOT STERILE PUSH STOP TO RESTART**	Door Switch contacts opened during Heatup Mode.	Check with person operating unit to see if door was opened as unit was heating up.	Explain proper operation. Push STOP to restart back to SELECT CYCLE Mode.
			Check Door Switch. Contact should be closed when door is in closed position.	If contact of Door Switch shows open when door is closed adjust or replace switch (Refer to para 4.20).
Code C384 (Type: *FATAL*)	**C384: STERILIZE MODE DOOR OPEN** **ITEMS NOT STERILE UNPLUG / RE-PLUG UNIT**	Door Switch contacts opened during Sterilize Mode.	Check Door Switch. Contact should be closed when door is in closed position.	If contact of Door Switch shows open when door is closed adjust or replace switch (Refer to para 4.20).
Code C385 (Type: *RESTART*)	**C385: VENT MODE DOOR OPEN** **ITEMS NOT STERILE PUSH STOP TO RESTART**	Door Switch contacts opened during Vent Mode.	Check with person operating unit to see if door was opened during Vent.	Explain proper operation. Push STOP to restart back to SELECT CYCLE Mode.
			Check Door Switch. Contact should be closed when door is in closed position.	If contact of Door Switch shows open when door is closed adjust or replace switch (Refer to para 4.20).
Code C431 (Type: *FAST RESTART*)	**C431: SELECT MODE AUX TEMP LOW** **PUSH STOP TO RESTART** Auxiliary temperature (trough) has not risen to at least 212°F (100°C) in 10 minutes while unit is in SELECT/PREHEAT mode. **Note:** An initial cycle must be ran and unit must be warm for this code to display.	Door left wide open and tray rack not in position.	Door is left wide open for an extended length of time* and tray rack is not in place in chamber. *Heaters will cycle on/off for 90 minutes to maintain preheat temp. 212°F (100°C).	Inform Operator that door should be placed in the partially open or closed position after each cycle.
		Water level of reservoir is covering outlet of condensing coil. Water siphons back into chamber trough resulting in low Auxiliary (trough) temperature.	Check if condensing coil outlet is beneath water level in reservoir.	• Inform operator not to over fill reservoir. • If reservoir is not over filled but coil outlet is submerged, bend coil so outlet is a maximum of 1 7/8" below top of lid opening. Do not allow coil to touch top or sides of reservoir.
		Solid State Relay (SSR) malfunctioning.	• Disconnect power from unit. • Remove line voltage leads from terminals 1 & 2 of SSR, place terminals out of way to prevent electrical shock. • Place meter probes on terminals 1 & 2 and check ohms. • Run Service Diagnostics, go to Steam and Auxiliary Heater Test. When Heaters are on (switch is closed) apprx. 700 ohms should register on meter.	If ohms value did not register on meter when heaters were energized replace Solid State Relay (SSR) (Refer to para 4.15).
		Auxiliary (upper) or Steam (lower) heater has open winding.	Check continuity of both heaters. 115 VAC heaters are 10 ohms, cold reading. 230 VAC heaters are 39 ohms, cold reading.	If a heater shows no or very different continuity, replace the heater (Refer to para(s) 4.31 or 4.32).

Table 2-5. Troubleshooting Guide

Problem	Display / Symptom	Probable Cause	Check	Correction
Code C431 *(Continued)* (Type: *FAST RESTART*)	*(Continued)* **C431: SELECT MODE AUX TEMP LOW** **PUSH STOP TO RESTART** Auxiliary temperature (trough) has not risen to at least 212°F (100°C) in 10 minutes while unit is in SELECT/PREHEAT mode. **Note:** An initial cycle must be ran and unit must be warm for this code to display.	Auxiliary Temperature Sensor malfunctioning.	Run Service Diagnostics and check STEAM and AUX temp readings.	If AUX temperature reading is not in line with STEAM replace Auxiliary Temperature Sensor (Refer to para 4.30).
		Main P.C. Board malfunctioning.	Run Service Diagnostics and check each function. Also, make the various voltage checks as indicated on the P.C. Board Schematic in Section 5.	Replace the P.C. Board (Refer to para 4.22). **Always** run Service Diagnostics (Para 2.2) before replacing P.C. Board.
Code C437 (Type: *FAST RESTART*)	**C437: DRY MODE AUX TEMP LOW** **PUSH STOP TO RESTART** Chamber Temperature sensed by Auxiliary (trough) Temp. Sensor (RTD) is lower than 158° F (70°C) after 5 minutes into DRY mode.	Door left wide open and tray rack not in position.	Door is left wide open for an extended length of time* and tray rack is not in place in chamber. *Heaters will cycle on/off for 90 minutes to maintain preheat temp. 212°F (100°C).	Inform Operator that door should be placed in the partially open or closed position after each cycle.
		Solid State Relay (SSR) malfunctioning.	• Disconnect power from unit. • Remove line voltage leads from terminals 1 & 2 of SSR, place terminals out of way to prevent electrical shock. • Place meter probes on terminals 1 & 2 and check ohms. • Run Service Diagnostics, go to Steam and Auxiliary Heater Test. When Heaters are on (switch is closed) apprx. 700 ohms should register on meter.	If ohms value did not register on meter when heaters were energized replace Solid State Relay (SSR) (Refer to para 4.15).
		Auxiliary (upper) or Steam (lower) heater has open winding.	Check continuity of both heaters. 115 VAC heaters are 10 ohms, cold reading. 230 VAC heaters are 39 ohms, cold reading.	If a heater shows no or very different continuity, replace the heater (Refer to para(s) 4.31 or 4.32).
		Auxiliary Temperature Sensor malfunctioning.	Run Service Diagnostics and check STEAM and AUX temp readings.	If AUX temperature reading is not in line with STEAM replace Auxiliary Temperature Sensor (Refer to para 4.30).
			Remove plug connector at J3 on P.C. Board and check resistance value (ohms) of RTD. Resistance values should be between the following: 75°F (23°C) = 1090 ohms. 545°F (285°C) = 2066 ohms. *Above values +/- 10 Ohms*	If Auxiliary Temperature probe shows open or values outside resistance ranges replace probe (Refer to para 4.30).

Table 2-5. Troubleshooting Guide

Problem	Display / Symptom	Probable Cause	Check	Correction
Code C437 *(Continued)* (Type: *FAST RESTART*)	*(Continued)* **C437: DRY MODE** **AUX TEMP LOW** **PUSH STOP TO RESTART** Chamber Temperature sensed by Auxiliary (trough) Temp. Sensor (RTD) is lower than 158° F (70°C) after 5 minutes into DRY mode.	Main P.C. Board malfunctioning.	Run Service Diagnostics and check each function. Also, make the various voltage checks as indicated on the P.C. Board Schematic in Section 5.	Replace the P.C. Board (Refer to para 4.22). **Always** run Service Diagnostics (Para 2.2) before replacing P.C. Board.
Code C461 (Type: *FAST RESTART*)	**C461: SELECT MODE** **AUX TEMP HARDWARE** **PUSH STOP TO RESTART** Auxiliary A / D converter reports an average value outside the limits for normal operation during the SELECT mode. **Note:** This will only occur during a warm start (back to back cycles).	Auxiliary Temperature Sensor (RTD) unplugged from P.C. Board.	Check condition of Auxiliary RTD plug on P.C. Board. (Refer to P.C. Board Schematic in Section 5).	Assure Auxiliary RTD plug connector is secure.
		Auxiliary Temperature Sensor (RTD) malfunctioning.	Remove plug connector at J3 on P.C. Board and check resistance value (ohms) of RTD. Resistance values should be between the following: 75°F (23°C) = 1090 ohms. 545°F (285°C) = 2066 ohms. *Above values +/- 10 Ohms*	If Auxiliary Temperature probe shows open or values outside resistance ranges replace probe (Refer to para 4.30.
		Main P.C. Board Malfunctioning.	Remove plug connector at J3 on P.C. Board and check voltage. Voltage should be apprx. 4.5 VDC at all times with unit plugged in. Also run Service Diagnostics.	If voltage is not present or Service Diagnostics reveals a problem replace P.C. Board (Refer to para 4.22). **Always** run Service Diagnostics (Para 2.2) before replacing P.C. Board.
Code C467 (Type: *FAST RESTART*)	**C467: DRY MODE** **AUX TEMP HARDWARE** **PUSH STOP TO RESTART** Auxiliary A / D converter reports an average value outside the limits for normal operation during the DRY mode.	Auxiliary Temperature Sensor (RTD) unplugged from P.C. Board.	Check condition of Auxiliary RTD plug on P.C. Board. (Refer to P.C. Board Schematic in Section 5).	Assure Auxiliary RTD plug connector is secure.
		Auxiliary Temperature Sensor (RTD) malfunctioning.	Remove plug connector at J3 on P.C. Board and check resistance value (ohms) of RTD. Resistance values should be between the following: 75°F (23°C) = 1090 ohms. 545°F (285°C) = 2066 ohms. *Above values +/- 10 Ohms*	If Auxiliary Temperature probe shows open or values outside resistance ranges replace probe (Refer to para 4.30).
		Main P.C. Board Malfunctioning.	Remove plug connector at J3 on P.C. Board and check voltage. Voltage should be apprx. 4.5 VDC at all times with unit plugged in. Also run Service Diagnostics.	If voltage is not present or Service Diagnostics reveals a problem replace P.C. Board (Refer to para 4.22). **Always** run Service Diagnostics (Para 2.2) before replacing P.C. Board.

Table 2-5. Troubleshooting Guide

Problem	Display / Symptom	Probable Cause	Check	Correction
Code C470 (Type: *FATAL*) **Note**: When a Code ends in "0" it means unit had a supply power interruption. The operator could have unplug the unit when a previous Code was displayed. Always go to Service Diagnostics and check previous 5 codes that are displayed.	**C470: POWER UP MODE** **AUX TEMP OVERLIM** **UNPLUG / RE-PLUG UNIT** Auxiliary temperature exceeds 568.4°F (298°C) during POWER UP mode.	Auxiliary Temperature Sensor (RTD) malfunctioning. Resistance value of RTD is above 2113 ohms, indicating temperature is over 568.4°F (298°C)	Remove plug connector at J3 on P.C. Board and check resistance value (ohms) of RTD. Resistance values should be between the following: 75°F (23°C) = 1090 ohms. 545°F (285°C) = 2066 ohms. *Above values +/- 10 Ohms*	If Auxiliary Temperature probe shows values outside resistance ranges replace probe (Refer to para 4.30).
		May be due to a malfunction that occurred previously to Code displayed.	Go to Service Diagnostics and check previous 5 displayed codes.	Refer to Code Numbers in Troubleshooting Guide to determine correction.
		Auxiliary (upper) high limit switch is weak and opened prematurely.	Disconnect power and check continuity across high limit switch. Limit opens at 475° F (246° C) +/- 25° F (-4° C) Close at 395° F (202° C) +/- 25° F (-4° C)	If continuity is not present and temperature at limit is below the Limit's "Open" temperature replace Limit Switch (Refer to para 4.28).
		P.C. Board malfunctioning.	Run Service Diagnostics and make various voltage checks as indicated on P.C. Schematic.	Replace P.C. Board (Refer to para 4.22). **Always** run Service Diagnostics (Para 2.2) before replacing P.C. Board.
Code C471 (Type: *FATAL*)	**C471: SELECT MODE** **AUX TEMP OVERLIM** **UNPLUG / RE-PLUG UNIT** Auxiliary temperature exceeds 568.4°F (298°C) during SELECT mode.	Auxiliary Temperature Sensor (RTD) malfunctioning. Resistance value of RTD is above 2113 ohms, indicating temperature is over 568.4°F (298°C)	Remove plug connector at J3 on P.C. Board and check resistance value (ohms) of RTD. Resistance values should be between the following: 75°F (23°C) = 1090 ohms. 545°F (285°C) = 2066 ohms. *Above values +/- 10 Ohms*	If Auxiliary Temperature probe shows values outside resistance ranges replace probe (Refer to para 4.30).
		Solid State Relay (SSR) shorted causing power being supplied to heaters constantly.	• Disconnect power from unit. • Remove line voltage leads from terminals 1 & 2 of SSR, place terminals out of way to prevent electrical shock. • Place meter probes on terminals 1 & 2 and check ohms. • Run Service Diagnostics, go to Steam and Auxiliary Heater Test. When Heaters are on (switch is closed) apprx. 700 ohms should register on meter.	If ohms value did not register on meter when heaters were energized replace Solid State Relay (SSR) (Refer to para 4.15).
		P.C. Board malfunctioning.	Run Service Diagnostics and make various voltage checks as indicated on P.C. Schematic.	Replace P.C. Board (Refer to para 4.22). **Always** run Service Diagnostics (Para 2.2) before replacing P.C. Board.

Table 2-5. Troubleshooting Guide

Problem	Display / Symptom	Probable Cause	Check	Correction
Code C472 (Type: *FATAL*)	**C472: FILL MODE AUX TEMP OVERLIM** **UNPLUG / RE-PLUG UNIT** Auxiliary temperature exceeds 568.4°F (298°C) during FILL mode.	Auxiliary Temperature Sensor (RTD) malfunctioning. Resistance value of RTD is above 2113 ohms, indicating temperature is over 568.4°F (298°C)	Remove plug connector at J3 on P.C. Board and check resistance value (ohms) of RTD. Resistance values should be between the following: 75°F (23°C) = 1090 ohms. 545°F (285°C) = 2066 ohms. *Above values +/- 10 Ohms*	If Auxiliary Temperature probe shows values outside resistance ranges replace probe (Refer to para 4.30).
		P.C. Board malfunctioning.	Run Service Diagnostics and make various voltage checks as indicated on P.C. Schematic.	Replace P.C. Board (Refer to para 4.22). **Always** run Service Diagnostics (Para 2.2) before replacing P.C. Board.
Code C473 (Type: *FATAL*)	**C473: HEATUP MODE AUX TEMP OVERLIM** **UNPLUG / RE-PLUG UNIT** Auxiliary temperature exceeds 568.4°F (298°C) during HEATUP mode.	Sterilizer not level, water fill is not adequate.	Check level as described in Installation of I/O manual.	Level unit.
		Water is not filling trough adequately due to dirty or corroded Level Sensor Probe.	Check condition of Level Sensor Probe.	Clean or replace Level Sensor Probe (Refer to para 4.33).
		Vent Valve malfunctioning, staying open.	Run Service Diagnostics and check Vent Valve operation and for leakage when closed. Check Vent Valve Solenoid coil: 115 VAC = 92 Ohms 230 VAC = 376 Ohms (+ / - 10 %)	If coil shows an “open” or leakage is determined, replace Vent Valve (Refer to para 4.27).
		Air Valve doesn’t close.	Check operation of Air Valve by running Service Diagnostics and check coil resistance. Refer to Schematic of Main P.C. Board.	Replace Air Valve Assembly (Refer to para 4.24).
		Auxiliary Temperature Sensor (RTD) malfunctioning. Resistance value of RTD is above 2113 ohms, indicating temperature is over 568.4°F (298°C)	Remove plug connector at J3 on P.C. Board and check resistance value (ohms) of RTD. Resistance values should be between the following: 75°F (23°C) = 1090 ohms. 545°F (285°C) = 2066 ohms. *Above values +/- 10 Ohms*	If Auxiliary Temperature probe shows values outside resistance ranges replace probe (Refer to para 4.30).
		P.C. Board malfunctioning.	Run Service Diagnostics and make various voltage checks as indicated on P.C. Schematic.	Replace P.C. Board (Refer to para 4.22). **Always** run Service Diagnostics (Para 2.2) before replacing P.C. Board.
Code C474 (Type: *FATAL*)	**C474: STERILIZE MODE AUX TEMP OVERLIM** **UNPLUG / RE-PLUG UNIT** Auxiliary temperature exceeds 568.4°F (298°C) during STERILIZE mode.	Sterilizer not level, water fill is not adequate.	Check level as described in Installation of I/O manual.	Level unit.

Table 2-5. Troubleshooting Guide

Problem	Display / Symptom	Probable Cause	Check	Correction
(Continued) **Code C474** (Type: *FATAL*)	*(Continued)* **C474: STERILIZE MODE AUX TEMP OVERLIM** **UNPLUG / RE-PLUG UNIT** Auxiliary temperature exceeds 568.4°F (298°C) during STERILIZE mode.	Water is not filling trough adequately due to dirty or corroded Level Sensor Probe.	Check condition of Level Sensor Probe.	Clean or replace Level Sensor Probe (Refer to para 4.33).
		Vent Valve malfunctioning, staying open.	Run Service Diagnostics and check Vent Valve operation and for leakage when closed. Check Vent Valve Solenoid coil: 115 VAC = 92 Ohms 230 VAC = 376 Ohms (+ / - 10 %)	If coil shows and “open” or leakage is determined, replace Vent Valve (Refer to para 4.27).
		Air Valve doesn’t close.	Check operation of Air Valve by running Service Diagnostics and check coil resistance. Refer to Schematic of Main P.C. Board.	Replace Air Valve Assembly (Refer to para 4.24).
		Auxiliary Temperature Sensor (RTD) malfunctioning. Resistance value of RTD is above 2113 ohms, indicating temperature is over 568.4°F (298°C)	Remove plug connector at J3 on P.C. Board and check resistance value (ohms) of RTD. Resistance values should be between the following: 75°F (23°C) = 1090 ohms. 545°F (285°C) = 2066 ohms. *Above values +/- 10 Ohms*	If Auxiliary Temperature probe shows values outside resistance ranges replace probe (Refer to para 4.30).
		Solid State Relay (SSR) shorted causing power being supplied to heaters constantly.	• Disconnect power from unit. • Remove line voltage leads from terminals 1 & 2 of SSR, place terminals out of way to prevent electrical shock. • Place meter probes on terminals 1 & 2 and check ohms. • Run Service Diagnostics, go to Steam and Auxiliary Heater Test. When Heaters are on (switch is closed) apprx. 700 ohms should register on meter.	If ohms value did not register on meter when heaters were energized replace Solid State Relay (SSR) (Refer to para 4.15).
		P.C. Board malfunctioning.	Run Service Diagnostics and make various voltage checks as indicated on P.C. Schematic.	Replace P.C. Board (Refer to para 4.22). **Always** run Service Diagnostics (Para 2.2) before replacing P.C. Board.

Table 2-5. Troubleshooting Guide

Problem	Display / Symptom	Probable Cause	Check	Correction
Code C475 VENT **Code C476 HEATUP** (Type: *FATAL*)	*(Refer to column on left for codes and description)* **C47X: XXXXXX MODE** **AUX TEMP OVERLIM** **ITEMS NOT STERILE *** **UNPLUG / RE-PLUG UNIT** *No message on this line unless it occurs during Venting because of a Temp Reg Warning. Auxiliary temperature exceeds 568.4°F (298°C) during VENT mode.	Auxiliary Temperature Sensor (RTD) malfunctioning. Resistance value of RTD is above 2113 ohms, indicating temperature is over 568.4°F (298°C)	Remove plug connector at J3 on P.C. Board and check resistance value (ohms) of RTD. Resistance values should be between the following: 75°F (23°C) = 1090 ohms. 545°F (285°C) = 2066 ohms. *Above values +/- 10 Ohms*	If Auxiliary Temperature probe shows values outside resistance ranges replace probe (Refer to para 4.30).
		Solid State Relay (SSR) shorted causing power being supplied to heaters constantly.	• Disconnect power from unit. • Remove line voltage leads from terminals 1 & 2 of SSR, place terminals out of way to prevent electrical shock. • Place meter probes on terminals 1 & 2 and check ohms. • Run Service Diagnostics, go to Steam and Auxiliary Heater Test. When Heaters are on (switch is closed) apprx. 700 ohms should register on meter.	If ohms value did not register on meter when heaters were energized replace Solid State Relay (SSR) (Refer to para 4.15).
		P.C. Board malfunctioning.	Run Service Diagnostics and make various voltage checks as indicated on P.C. Schematic.	Replace P.C. Board (Refer to para 4.22). **Always** run Service Diagnostics (Para 2.2) before replacing P.C. Board.
Code C477 (Type: *FATAL*)	**C477: DRY MODE** **AUX TEMP OVERLIM** **UNPLUG / RE-PLUG UNIT** Auxiliary temperature exceeds 568.4°F (298°C) during DRY mode.	Auxiliary Temperature Sensor (RTD) malfunctioning. Resistance value of RTD is above 2113 ohms, indicating temperature is over 568.4°F (298°C)	Remove plug connector at J3 on P.C. Board and check resistance value (ohms) of RTD. Resistance values should be between the following: 75°F (23°C) = 1090 ohms. 545°F (285°C) = 2066 ohms. *Above values +/- 10%*	If Auxiliary Temperature probe shows values outside resistance ranges replace probe (Refer to para 4.30).
		Main Relay malfunctioning keeping Steam Heater energized.	Run Service Diagnostics, Main Relay Test, Steam & Auxiliary Heater Test.	If Main Relay did not function correctly replace Relay (Refer to para 4.16).
		Solid State Relay (SSR) shorted causing power being supplied to heaters constantly.	• Disconnect power from unit. • Remove line voltage leads from terminals 1 & 2 of SSR, place terminals out of way to prevent electrical shock. • Place meter probes on terminals 1 & 2 and check ohms. • Run Service Diagnostics, go to Steam and Auxiliary Heater Test. When Heaters are on (switch is closed) apprx. 700 ohms should register on meter.	If ohms value did not register on meter when heaters were energized replace Solid State Relay (SSR) (Refer to para 4.15).

© Midmark Corporation 1999 SF-1597 Rev. (10/02)

Printed in U.S.A.

Table 2-5. Troubleshooting Guide

Problem	Display / Symptom	Probable Cause	Check	Correction
Code C533 (Type: *FATAL*)	**C533: HEATUP MODE STEAM TEMP LOW** **ITEMS NOT STERILE UNPLUG / RE-PLUG UNIT** During Heat Up Mode steam temperature (monitored by Side RTD) does not rise at least 5°F (2.78°C) within 10 minutes. Sterilization Mode not reached by 20 minutes.	Steam Heater is malfunctioning not supplying heat.	Check continuity of Steam (Lower) heater. 115 VAC heaters are 10 ohms, cold reading. 230 VAC heaters are 39 ohms, cold reading.	If no continuity registers replace heater (Refer to para 4-31).
		Steam leakage from chamber.	Check door gasket, all fittings and valves for leakage.	Repair or replace leaking component(s).
		Solid State Relay (SSR) malfunctioning.	• Disconnect power from unit. • Remove line voltage leads from terminals 1 & 2 of SSR, place terminals out of way to prevent electrical shock. • Place meter probes on terminals 1 & 2 and check ohms. • Run Service Diagnostics, go to Steam and Auxiliary Heater Test. When Heaters are on (switch is closed) apprx. 700 ohms should register on meter.	If ohms value did not register on meter when heaters were energized replace Solid State Relay (SSR) (Refer to para 4.15).
		Main Relay malfunctioning.	Run Service Diagnostics, Main Relay Test, Steam & Auxiliary Heater Test.	If Main Relay did not function correctly replace Relay (Refer to para 4.16).
		Steam Temperature sensor (RTD) is malfunctioning.	Run Service Diagnostics and check STEAM and AUX temp readings.	If STEAM temperature reading is not in line with AUX replace STEAM Temperature Sensor (Refer to para 4.19).
		Main P.C. Board Malfunctioning.	Remove plug connector at J5 on P.C. Board and check voltage. Voltage should be apprx. 4.5 VDC at all times with unit plugged in. Also, run Service Diagnostics.	If voltage is not present or Service Diagnostics reveals a problem replace P.C. Board (Refer to para 4.22). **Always** run Service Diagnostics (Para 2.2) before replacing P.C. Board.
Code C544. (Error Type: *FATAL*)	**C544: STERILIZE MODE STEAM TEMP HIGH** **ITEMS NOT STERILE UNPLUG / RE-PLUG UNIT** During the Sterilization Mode of the particular cycle, the chamber temp. increases (+6°F) above the cycle's designated sterilization temp.	Water dissipated or leaked out thru Vent or Fill Valve causing temperature in chamber to fluctuate over Sterilization temperature.	Check condition of Vent and Fill Valves to assure they are not leaking thru valve.	Replace malfunctioning valve if required (Refer to para 4.27).
		Steam Temperature sensor (RTD) is malfunctioning.	Place a calibrated temperature probe inside chamber & run Service Diagnostics and check STEAM temp readings.	If STEAM temperature reading is not in line with temperature probe reading replace STEAM Temperature Sensor (Refer to para 4.19).
		Main P.C. Board Malfunctioning.	Remove plug connector at J5 on P.C. Board and check voltage on pins 1 & 2. Voltage should be apprx. 4.5 VDC at all times with unit plugged in. Also, run Service Diagnostics.	If voltage is not present or Service Diagnostics reveals a problem replace P.C. Board (Refer to para 4.22). **Always** run Service Diagnostics (Para 2.2) before replacing P.C. Board.

Table 2-5. Troubleshooting Guide

Problem	Display / Symptom	Probable Cause	Check	Correction
Code C554 (Type: *FATAL*)	**C554: STERILIZE MODE STEAM TEMP REG** **ITEMS NOT STERILE UNPLUG / RE-PLUG UNIT** For the 2nd time (1st time unit automatically restarts) during Sterilization Mode, questionable regulation of sterilization conditions (pressure / temperature) inside chamber.	Inadequate water in chamber trough. Unit not level.	Visual check water level in chamber trough after FILL.	Level sterilizer per instructions in Installation / Operation Manual, "Leveling the Sterilizer."
		Chamber being overloaded, especially if overloaded with porous articles such as towels, etc.	Check for overloading conditions.	Inform Operator of proper loading procedures. Refer to Operation Manual.
		Steam leakage from chamber.	Check door gasket, all fittings and valves for leakage.	Repair or replace leaking component(s).
		Temperature RTD out of calibration. A Temperature Sensor or P.C. Board were recently replaced.	Getting frequent C554 or other codes due to an inaccurate steam temperature.	Calibrate the Temperature Settings (Refer to para 2.3).
		Pressure Transducer out of calibration. A pressure transducer or P.C. Board were recently replaced.	If getting frequent C554 or codes that an inaccurate pressure reading would be the cause of.	Calibrate the Pressure Settings (Refer to para 2.3).
		Air Valve malfunctioning.	Check operation of Air Valve by running Service Diagnostics and check coil resistance. Refer to Schematic of Main P.C. Board.	Replace Air Valve Assembly (Refer to para 4.24).
		Pressure Transducer malfunctioning.	• Check Pressure Transducer ribbon cable at J14 connector on P.C. Board to assure connector is secure. • Disconnect Pressure Transducer connector from J14 plug and check for 5.0 VDC at pins 1 & 2 when power is applied to P.C. Board. (Refer to P.C. Board Schematic, Section 5).	If Pressure Transducer connector is secure and 5.0 VDC is present at pins 1 & 2 replace Pressure Transducer (Refer to para 4.18).
		Steam Temperature Sensor (RTD) malfunctioning.	Run Service Diagnostics, compare readings from Steam (Side) and Auxiliary (trough) temp. sensors. Unplug Steam Temp. RTD and check continuity of sensor.	If sensor shows open reading on continuity or a 32° F (0° C) reading during Service Diagnostics, replace Sensor (Refer to para 4.19).
		P.C. Board malfunctioning.	Disconnect Pressure Transducer connector from J14 plug and check for 5.0 VDC at pins 1 & 2 when power is applied to P.C. Board.(Refer to P.C. Board Schematic, Section 5).	If 5.0 VDC is not present when voltage is applied to P.C. board replace board (Refer to para 4.22). **Always** run Service Diagnostics (Para 2.2) before replacing P.C. Board.

Table 2-5. Troubleshooting Guide

Problem	Display / Symptom	Probable Cause	Check	Correction
Code C560 (Type: *FATAL*) **Note**: When a Code ends in "0" it means unit had a supply power interruption. The operator could have unplug the unit when a previous Code was displayed. Always go to Service Diagnostics and check previous 5 codes that are displayed.	**C560: POWER UP MODE STEAM TEMP HARDWARE** **UNPLUG / RE-PLUG UNIT** Steam A/ D converter reports an average value outside the limits for normal operation during POWER UP mode.	May be due to a malfunction that occurred previously to Code displayed.	Go to Service Diagnostics and check previous 5 displayed codes.	Refer to Code Numbers in Troubleshooting Guide to determine correction.
		Steam Temperature Sensor (RTD) unplugged from P.C. Board at J5 pin connector.	Check condition of Steam RTD plug on P.C. Board. (Refer to P.C. Board Schematic in Section 5).	Assure Steam RTD plug connector is secure.
		Steam Temperature Sensor (RTD), located on side of chamber, malfunctioning.	Remove plug connector at J5 on P.C. Board and check resistance value (ohms) of RTD. Resistance values should be between the following: 75°F (23°C) = 1090 ohms. 545°F (285°C) = 2066 ohms. *Above values +/- 10 Ohms*	If Steam Temperature probe shows open or values outside resistance ranges replace probe (Refer to para 4.19).
		Main P.C. Board Malfunctioning.	Remove plug connector at J5 on P.C. Board and check voltage. Voltage should be apprx. 4.5 VDC at all times with unit plugged in. Also run Service Diagnostics.	If voltage is not present or Service Diagnostics reveals a problem replace P.C. Board (Refer to para 4.22). **Always** run Service Diagnostics (Para 2.2) before replacing P.C. Board.
Code C561 SELECT **Code C562 FILL** **Code C563 HEATUP** **Code C564 STERILIZE** **Code C565 VENT** **Code C566 DOOR** **Code C567 DRY** (Type: *FATAL*)	*(Refer to column on left for codes and description)* **C56X: XXXXXX MODE STEAM TEMP HARDWARE** **UNPLUG / RE-PLUG UNIT** Steam A/ D converter reports an average value outside the limits for normal operation during SELECT mode.	Steam Temperature Sensor (RTD) unplugged from P.C. Board at J5 pin connector.	Check condition of Steam RTD plug on P.C. Board. (Refer to P.C. Board Schematic in Section 5).	Assure Steam RTD plug connector is secure.
		Steam Temperature Sensor (RTD), located on side of chamber, malfunctioning.	Remove plug connector at J5 on P.C. Board and check resistance value (ohms) of RTD. Resistance values should be between the following: 75°F (23°C) = 1090 ohms. 545°F (285°C) = 2066 ohms. *Above values +/- 10 Ohms*	If Steam Temperature probe shows open or values outside resistance ranges replace probe (Refer to para 4.19).
		Main P.C. Board Malfunctioning.	Remove plug connector at J5 on P.C. Board and check voltage. Voltage should be apprx. 4.5 VDC at all times with unit plugged in. Also run Service Diagnostics.	If voltage is not present or Service Diagnostics reveals a problem replace P.C. Board (Refer to para 4.22). **Always** run Service Diagnostics (Para 2.2) before replacing P.C. Board.
Code C570 (Type: *FATAL*) **Note**: When a Code ends in "0" it means unit had a supply power interruption. The operator could have unplug the unit when a previous Code was displayed. Always go to Service Diagnostics and check previous 5 codes that are displayed.	**C570: POWER UP MODE STEAM TEMP OVERLIM** **UNPLUG / RE-PLUG UNIT** Steam temperature exceeds 276.1°F (135.6°C) during POWER UP mode.	May be due to a malfunction that occurred previously to Code displayed.	Go to Service Diagnostics and check previous 5 displayed codes.	Refer to Code Numbers in Troubleshooting Guide to determine correction.

Table 2-5. Troubleshooting Guide

Problem	Display / Symptom	Probable Cause	Check	Correction
Code C570 *(Continued)* (Type: *FATAL*) **Note**: When a Code ends in "0" it means unit had a supply power interruption. The operator could have unplug the unit when a previous Code was displayed. Always go to Service Diagnostics and check previous 5 codes that are displayed.	*(Continued)* **C570: POWER UP MODE STEAM TEMP OVERLIM** **UNPLUG / RE-PLUG UNIT** Steam temperature exceeds 276.1°F (135.6°C) during POWER UP mode.	Steam Temperature Sensor (RTD), located on side of chamber, malfunctioning.	Remove plug connector at J5 on P.C. Board and check resistance value (ohms) of RTD. Resistance values should be between the following: 75°F (23°C) = 1090 ohms. 545°F (285°C) = 2066 ohms. *Above values +/- 10 Ohms*	If Steam Temperature probe shows open or values outside resistance ranges replace probe (Refer to para 4.19).
		Main P.C. Board Malfunctioning.	Remove plug connector at J5 on P.C. Board and check voltage. Voltage should be apprx. 4.5 VDC at all times with unit plugged in. Also run Service Diagnostics.	If voltage is not present or Service Diagnostics reveals a problem replace P.C. Board (Refer to para 4.22). **Always** run Service Diagnostics (Para 2.2) before replacing P.C. Board.
Code C571 SELECT **Code C572 FILL** (Type: *FATAL*)	*(Refer to column on left for codes and description)* **C57X: XXXXXX MODE STEAM TEMP OVERLIM** **UNPLUG / RE-PLUG UNIT** Steam temperature exceeds 276.1°F (135.6°C) during SELECT mode.	Steam Temperature Sensor (RTD), located on side of chamber, malfunctioning.	Remove plug connector at J5 on P.C. Board and check resistance value (ohms) of RTD. Resistance values should be between the following: 75°F (23°C) = 1090 ohms. 545°F (285°C) = 2066 ohms. *Above values +/- 10 Ohms*	If Steam Temperature probe shows open or values outside resistance ranges replace probe (Refer to para 4.19).
		Solid State Relay (SSR) shorted causing power being supplied to heaters constantly.	• Disconnect power from unit. • Remove line voltage leads from terminals 1 & 2 of SSR, place terminals out of way to prevent electrical shock. • Place meter probes on terminals 1 & 2 and check ohms. • Run Service Diagnostics, go to Steam and Auxiliary Heater Test. When Heaters are on (switch is closed) apprx. 700 ohms should register on meter.	If ohms value did not register on meter when heaters were energized replace Solid State Relay (SSR) (Refer to para 4.15).
		Main Relay malfunctioning keeping Steam Heater energized.	Run Service Diagnostics, Main Relay Test, Steam & Auxiliary Heater Test.	If Main Relay did not function correctly replace Relay (Refer to para 4.16).
		Main P.C. Board Malfunctioning.	Remove plug connector at J5 on P.C. Board and check voltage. Voltage should be apprx. 4.5 VDC at all times with unit plugged in. Also run Service Diagnostics.	If voltage is not present or Service Diagnostics reveals a problem replace P.C. Board (Refer to para 4.22). **Always** run Service Diagnostics (Para 2.2) before replacing P.C. Board.
Code C573 (Type: *FATAL*)	**C573: HEATUP MODE STEAM TEMP OVERLIM** **ITEMS NOT STERILE UNPLUG / RE-PLUG UNIT** Steam temperature exceeds 276.1°F (135.6°C) during HEAT UP mode.	Some error code occurred resulting in Operator unplugging and re-plugging unit while chamber was hot (over 276° F [135° C]).	Run Service Diagnostics and check Steam (side) Temperature.	Unplug unit and allow unit to cool below 276° F (135° C). Plug unit in and run a cycle.

Table 2-5. Troubleshooting Guide

Problem	Display / Symptom	Probable Cause	Check	Correction
Code C573 *(Continued)* (Type: *FATAL*)	*(Continued)* **C573: HEATUP MODE STEAM TEMP OVERLIM** **ITEMS NOT STERILE UNPLUG / RE-PLUG UNIT** Steam temperature exceeds 276.1°F (135.6°C) during HEAT UP mode.	Steam Temperature Sensor (RTD), located on side of chamber, malfunctioning.	Remove plug connector at J5 on P.C. Board and check resistance value (ohms) of RTD. Resistance values should be between the following: 75°F (23°C) = 1090 ohms. 545°F (285°C) = 2066 ohms. *Above values +/- 10 Ohms*	If Steam Temperature probe shows open or values outside resistance ranges replace probe (Refer to para 4.19).
		Solid State Relay (SSR) shorted causing power being supplied to heaters constantly.	• Disconnect power from unit. • Remove line voltage leads from terminals 1 & 2 of SSR, place terminals out of way to prevent electrical shock. • Place meter probes on terminals 1 & 2 and check ohms. • Run Service Diagnostics, go to Steam and Auxiliary Heater Test. When Heaters are on (switch is closed) apprx. 700 ohms should register on meter.	If ohms value did not register on meter when heaters were energized replace Solid State Relay (SSR) (Refer to para 4.15).
		Main Relay malfunctioning keeping Steam Heater energized.	Run Service Diagnostics, Main Relay Test, Steam & Auxiliary Heater Test.	If Main Relay did not function correctly replace Relay (Refer to para 4.16).
		Pressure lines to Pressure Transducer restricted or clogged.	Check for restriction in tubing and chamber access hole for Pressure Transducer.	Clear any restriction that could prevent chamber pressure from reaching Pressure Transducer.
		Pressure Transducer malfunctioning.	• Check Pressure Transducer ribbon cable at J14 connector on P.C. Board to assure connector is secure. • Disconnect Pressure Transducer connector from J14 plug and check for 5.0 VDC at pins 1 & 2 when power is applied to P.C. Board. (Refer to P.C. Board Schematic, Section 5).	If Pressure Transducer connector is secure and 5.0 VDC is present at pins 1 & 2 replace Pressure Transducer (Refer to para 4.18).
		Cassette Tray Rack installed backward in chamber causing water level sensor shorting to rack resulting in no fill and heaters to overheat.	Check to assure Cassette Tray Rack is installed correctly.	Inform operator of correct position of Cassette Tray Rack.
		Main P.C. Board Malfunctioning.	Remove plug connector at J5 on P.C. Board and check voltage. Voltage should be apprx. 4.5 VDC at all times with unit plugged in. Also run Service Diagnostics.	If voltage is not present or Service Diagnostics reveals a problem replace P.C. Board (Refer to para 4.22). **Always** run Service Diagnostics (Para 2.2) before replacing P.C. Board.

Table 2-5. Troubleshooting Guide

Problem	Display / Symptom	Probable Cause	Check	Correction
Code C574 (Type: *FATAL*)	**C574: STERILIZE MODE STEAM TEMP OVERLIM** **ITEMS NOT STERILE UNPLUG / RE-PLUG UNIT** Steam temperature exceeds 276.1°F (135.6°C) during STERILIZE mode.	Some error code occurred resulting in Operator unplugging and re-plugging unit while chamber was hot (over 276° F [135° C]).	Run Service Diagnostics and check Steam (side) Temperature.	Unplug unit and allow unit to cool below 276° F (135° C). Plug unit in and run a cycle.
		Steam Temperature Sensor (RTD), located on side of chamber, malfunctioning.	Remove plug connector at J5 on P.C. Board and check resistance value (ohms) of RTD. Resistance values should be between the following: 75°F (23°C) = 1090 ohms. 545°F (285°C) = 2066 ohms. *Above values +/- 10 Ohms*	If Steam Temperature probe shows open or values outside resistance ranges replace probe (Refer to para 4.19).
		Solid State Relay (SSR) shorted causing power being supplied to heaters constantly.	• Disconnect power from unit. • Remove line voltage leads from terminals 1 & 2 of SSR, place terminals out of way to prevent electrical shock. • Place meter probes on terminals 1 & 2 and check ohms. • Run Service Diagnostics, go to Steam and Auxiliary Heater Test. When Heaters are on (switch is closed) apprx. 700 ohms should register on meter.	If ohms value did not register on meter when heaters were energized replace Solid State Relay (SSR) (Refer to para 4.15).
		Main Relay malfunctioning keeping Steam Heater energized.	Run Service Diagnostics, Main Relay Test, Steam & Auxiliary Heater Test.	If Main Relay did not function correctly replace Relay (Refer to para 4.16).
		Pressure lines to Pressure Transducer restricted or clogged.	Check for restriction in tubing and chamber access hole for Pressure Transducer.	Clear any restriction that could prevent chamber pressure from reaching Pressure Transducer.
		Pressure Transducer malfunctioning.	• Check Pressure Transducer ribbon cable at J14 connector on P.C. Board to assure connector is secure. • Disconnect Pressure Transducer connector from J14 plug and check for 5.0 VDC at pins 1 & 2 when power is applied to P.C. Board. (Refer to P.C. Board Schematic, Section 5).	If Pressure Transducer connector is secure and 5.0 VDC is present at pins 1 & 2 replace Pressure Transducer (Refer to para 4.18).
		Main P.C. Board Malfunctioning.	Remove plug connector at J5 on P.C. Board and check voltage. Voltage should be apprx. 4.5 VDC at all times with unit plugged in. Also run Service Diagnostics.	If voltage is not present or Service Diagnostics reveals a problem replace P.C. Board (Refer to para 4.22). **Always** run Service Diagnostics (Para 2.2) before replacing P.C. Board.

Table 2-5. Troubleshooting Guide

Problem	Display / Symptom	Probable Cause	Check	Correction
Code C575 (Type: *FATAL*)	**C575: VENT MODE STEAM TEMP OVERLIM ITEMS NOT STERILE * UNPLUG / RE-PLUG UNIT** *No message on this line unless it occurs during Venting because of a Temp Reg Warning. Steam temperature exceeds 276.1°F (135.6°C) during VENT mode.	Filter screen in trough restricted.	Remove filter screen and check condition.	Clean or replace filter screen.
		Vent Valve malfunctioning or related lines or fittings restricted.	Run Service Diagnostics and check Vent Valve operation and check for debris in Valve and related lines and fittings.	Clean or replace Vent Valve, related lines and fittings (Refer to para 4.27).
		Steam Temperature Sensor (RTD), located on side of chamber, malfunctioning.	Remove plug connector at J5 on P.C. Board and check resistance value (ohms) of RTD. Resistance values should be between the following: 75°F (23°C) = 1090 ohms. 545°F (285°C) = 2066 ohms. *Above values +/- 10 Ohms*	If Steam Temperature probe shows open or values outside resistance ranges replace probe (Refer to para 4.19).
		Solid State Relay (SSR) shorted causing power being supplied to heaters constantly.	• Disconnect power from unit. • Remove line voltage leads from terminals 1 & 2 of SSR, place terminals out of way to prevent electrical shock. • Place meter probes on terminals 1 & 2 and check ohms. • Run Service Diagnostics, go to Steam and Auxiliary Heater Test. When Heaters are on (switch is closed) apprx. 700 ohms should register on meter.	If ohms value did not register on meter when heaters were energized replace Solid State Relay (SSR) (Refer to para 4.15).
		Main Relay malfunctioning keeping Steam Heater energized.	Run Service Diagnostics, Main Relay Test, Steam & Auxiliary Heater Test.	If Main Relay did not function correctly replace Relay (Refer to para 4.16).
		Main P.C. Board Malfunctioning.	Remove plug connector at J5 on P.C. Board and check voltage. Voltage should be apprx. 4.5 VDC at all times with unit plugged in. Also run Service Diagnostics.	If voltage is not present or Service Diagnostics reveals a problem replace P.C. Board (Refer to para 4.22). **Always** run Service Diagnostics (Para 2.2) before replacing P.C. Board.
Code C576 (Type: *FATAL*)	**C576: DOOR MODE STEAM TEMP OVERLIM UNPLUG / RE-PLUG UNIT** Steam temperature exceeds 276.1°F (135.6°C) during DOOR OPEN mode.	Steam Temperature Sensor (RTD), located on side of chamber, malfunctioning.	Remove plug connector at J5 on P.C. Board and check resistance value (ohms) of RTD. Resistance values should be between the following: 75°F (23°C) = 1090 ohms. 545°F (285°C) = 2066 ohms. *Above values +/- 10 Ohms*	If Steam Temperature probe shows open or values outside resistance ranges replace probe (Refer to para 4.19).

© Midmark Corporation 1999 SF-1597 Rev. (10/02)

Printed in U.S.A.

Table 2-5. Troubleshooting Guide

Problem	Display / Symptom	Probable Cause	Check	Correction
Code C576 *(Continued)* (Type: *FATAL*)	*(Continued)* **C576: DOOR MODE STEAM TEMP OVERLIM** **UNPLUG / RE-PLUG UNIT** Steam temperature exceeds 276.1°F (135.6°C) during DOOR OPEN mode	Solid State Relay (SSR) shorted causing power being supplied to heaters constantly.	• Disconnect power from unit. • Remove line voltage leads from terminals 1 & 2 of SSR, place terminals out of way to prevent electrical shock. • Place meter probes on terminals 1 & 2 and check ohms. • Run Service Diagnostics, go to Steam and Auxiliary Heater Test. When Heaters are on (switch is closed) apprx. 700 ohms should register on meter.	If ohms value did not register on meter when heaters were energized replace Solid State Relay (SSR) Refer to para 4.15).
		Main Relay malfunctioning keeping Steam Heater energized.	Run Service Diagnostics, Main Relay Test, Steam & Auxiliary Heater Test.	If Main Relay did not function correctly replace Relay (Refer to para 4.16).
		Main P.C. Board Malfunctioning.	Remove plug connector at J5 on P.C. Board and check voltage. Voltage should be apprx. 4.5 VDC at all times with unit plugged in. Also run Service Diagnostics.	If voltage is not present or Service Diagnostics reveals a problem replace P.C. Board (Refer to para 4.22). **Always** run Service Diagnostics (Para 2.2) before replacing P.C. Board.
Code C577 (Type: *FATAL*)	**C577: DRY MODE STEAM TEMP OVERLIM** **UNPLUG / RE-PLUG UNIT** Steam temperature exceeds 276.1°F (135.6°C) during DRY OPEN mode.	Door malfunctioning, not opening.	Door may be remaining closed due to gasket sticking due to Operator running multiple cycles and interupting total time for Dry Cycle causing overheating conditions and gasket to swell. Allow unit to cool and run Service Diagnostics to check door operation.	Inform Operator about proper operation. Clean or replace door gasket (Refer to para 4.10).
		Steam Temperature Sensor (RTD), located on side of chamber, malfunctioning.	Remove plug connector at J5 on P.C. Board and check resistance value (ohms) of RTD. Resistance values should be between the following: 75°F (23°C) = 1090 ohms. 545°F (285°C) = 2066 ohms. *Above values +/- 10 Ohms*	If Steam Temperature probe shows open or values outside resistance ranges replace probe (Refer to para 4.19).
		Solid State Relay (SSR) shorted causing power being supplied to heaters constantly.	• Disconnect power from unit. • Remove line voltage leads from terminals 1 & 2 of SSR, place terminals out of way to prevent electrical shock. • Place meter probes on terminals 1 & 2 and check ohms. • Run Service Diagnostics, go to Steam and Auxiliary Heater Test. When Heaters are on (switch is closed) apprx. 700 ohms should register on meter.	If ohms value did not register on meter when heaters were energized replace Solid State Relay (SSR) (Refer to para 4.15).

Table 2-5. Troubleshooting Guide

Problem	Display / Symptom	Probable Cause	Check	Correction
Code C577 *(Continued)* (Type: *FATAL*)	*(Continued)* **C577: DRY MODE STEAM TEMP OVERLIM** **UNPLUG / RE-PLUG UNIT** Steam temperature exceeds 276.1°F (135.6°C) during DRY OPEN mode.	Main Relay malfunctioning keeping Steam Heater energized.	Run Service Diagnostics, Main Relay Test, Steam & Auxiliary Heater Test.	If Main Relay did not function correctly replace Relay (Refer to para 4.16).
		Main P.C. Board Malfunctioning.	Remove plug connector at J5 on P.C. Board and check voltage. Voltage should be apprx. 4.5 VDC at all times with unit plugged in. Also run Service Diagnostics.	If voltage is not present or Service Diagnostics reveals a problem replace P.C. Board (Refer to para 4.22). **Always** run Service Diagnostics (Para 2.2) before replacing P.C. Board.
Code C633 (Type: *FATAL*)	**C633: HEATUP MODE PRESSURE LOW** **ITEMS NOT STERILE UNPLUG / RE-PLUG UNIT** After Air Valve closes if chamber pressure doesn't reach 1 Psig in 1 minute or gauge pressure inside chamber does not reach at least 4.93 psig (34 kPag) within 16 minutes since the beginning of HEAT UP mode.	Door gasket leaking.	Check door gasket for leakage.	Replace door gasket (Refer to para 4.10).
		Pressure Relief Valve leaking.	Check for pressure leaking from pressure relief valve. Lanyard, connect to relief valve may be holding open valve.	Check lanyard, If pressure relief valve continues to leak replace it (Refer to para 4.26).
		Vent Valve leaking.	Check for leakage from Vent Valve.	Replace Vent Valve (Refer to para 4.27).
		Air Valve leaking.	Check for leakage from Air Valve.	Replace Air Valve (Refer to para 4.24).
		Leakage around fittings, etc.	Check for leakage around fittings.	Tighten or replace leaking fitting(s).
		Steam (Lower, trough) Heater malfunctioning.	Check Steam Heater resistance and for grounding. 115 VAC = 10 Ohms* 230 VAC = 39 Ohms* (+/- 10% cold reading)	If Steam heater shows open or short replace heater (Refer to para 4.31).
		Main Relay contacts (NO) did not close, energizing Steam Heater.	Run Service Diagnostics and check continuity across Main Relay contacts (NO) when operated.	If Main Relay contacts do not close when relay is energized replace Main Relay (Refer to para 4.16).
		Pressure Transducer out of calibration. A pressure transducer or P.C. Board were recently replaced.	Getting frequent codes that an inaccurate pressure reading would contribute to.	Calibrate the Pressure Setting (Refer to para 2.3).
		Pressure Transducer malfunctioning.	• Check Pressure Transducer ribbon cable at J14 connector on P.C. Board to assure connector is secure. • Disconnect Pressure Transducer connector from J14 plug and check for 5.0 VDC at pins 1 & 2 when power is applied to P.C. Board. (Refer to P.C. Board Schematic, Section 5).	If voltage is present, replace pressure transducer (Refer to para 4.18).
		Main P.C. Board malfunctioning.	Remove plug connector at J14 on P.C. board and check for 5.0 VDC. with unit plugged in. Also, run Service Diagnostics.	If voltage is not present replace Main P.C. board (Refer to para 4.22). **Always** run Service Diagnostics (Para 2.2) before replacing P.C. Board.

Table 2-5. Troubleshooting Guide

Problem	Display / Symptom	Probable Cause	Check	Correction
Code C642 (Type: *RESTART*)	**C642: FILL MODE PRESSURE HIGH** **ITEMS NOT STERILE PUSH STOP TO RESTART** After Filling has begun, gauge pressure inside chamber is equal to or greater than 2.18 PSIG (15 kPa). Note: This code would appear when the unit was being ran during consecutive cycles, one after another, with a hot chamber.	Air Valve doesn't close.	Check operation of Air Valve by running Service Diagnostics and check coil resistance. Refer to Schematic of Main P.C. Board.	Replace Air Valve Assembly (Refer to para 4.24).
		Vent Valve malfunctioning, staying open.	Run Service Diagnostics and check Vent Valve operation and for leakage when closed. Check Vent Valve Solenoid coil: 115 VAC = 92 Ohms 230 VAC = 376 Ohms (+ / - 10 %)	If coil shows an "open" or leakage is determined, replace Vent Valve (Refer to para 4.27).
		Atmospheric Pressure is out of calibration.	If same Code is displayed on every run.	Calibrate unit to Atmospheric pressure (Refer to SW2 Settings, Section 5).
		Pressure Transducer out of calibration. A pressure transducer or P.C. Board were recently replaced and unit was not calibrated.	Getting frequent codes that an inaccurate pressure reading would contribute to.	Calibrate the Temperature / Pressure Settings (Refer to para 2.3).
Code C645 (Type: *RESTART*)	**C645: VENT MODE PRESSURE HIGH** **ITEMS NOT STERILE * PUSH STOP TO RESTART** *No message on this line unless it occurs during Venting because of a Temp Reg Warning. Absolute pressure inside chamber is greater than 0.73 PSIG (5 kPa) for longer than 5 minutes (i.e., Vent mode not complete).	Vent Valve malfunctioning, staying open.	Run Service Diagnostics and check Vent Valve operation and for leakage when closed. Check Vent Valve Solenoid coil: 115 VAC = 92 Ohms 230 VAC = 376 Ohms (+ / - 10 %)	If coil shows an "open" or leakage is determined, replace Vent Valve (Refer to para 4.27).
		Pressure Transducer malfunctioning.	• Check Pressure Transducer ribbon cable at J14 connector on P.C. Board to assure connector is secure. • Disconnect Pressure Transducer connector from J14 plug and check for 5.0 VDC at pins 1 & 2 when power is applied to P.C. Board. (Refer to P.C. Board Schematic, Section 5).	If Pressure Transducer connector is secure and 5.0 VDC is present at pins 1 & 2 replace Pressure Transducer (Refer to para 4.18).
		Main P.C. Board Malfunctioning.	Remove plug connector at J5 on P.C. Board and check voltage. Voltage should be apprx. 4.5 VDC at all times with unit plugged in. Also run Service Diagnostics.	If voltage is not present or Service Diagnostics reveals a problem replace P.C. Board (Refer to para 4.22). **Always** run Service Diagnostics (Para 2.2) before replacing P.C. Board.
Code C647 (Type: *RESTART*)	**C647: DRY MODE PRESSURE HIGH** **PUSH STOP TO RESTART** Gauge pressure inside chamber is equal to or greater than 2.18 PSIG (15 kPa) during DRY mode.	Door did not fully open even though latch released allowing chamber to retain a slight pressure. Door Gasket may have stuck due to abnormally high temperatures at Start-up (230° F or above) due to running back-to-back cycles over a period of time.	Run Service Diagnostics to check component operation. Check amount of cycles (back-to-back) Operator ran before problem occurred. Check condition of door gasket.	If door gasket is worn or dirty clean or replace gasket (Refer to para 4.10). Inform Operator that problem could occur when back-to-back cycles have been ran and Start-up temperature is 230° F or above.

© Midmark Corporation 1999 SF-1597 Rev. (10/02)

Printed in U.S.A.

Table 2-5. Troubleshooting Guide

Problem	Display / Symptom	Probable Cause	Check	Correction
Code C647 *(Continued)* (Type: *RESTART*)	*(Continued)* **C647: DRY MODE PRESSURE HIGH** **PUSH STOP TO RESTART** Gauge pressure inside chamber is equal to or greater than 2.18 PSIG (15 kPa) during DRY mode.	Filter screen in trough restricted.	Remove filter screen and check condition.	Clean or replace filter screen.
		Vent Valve malfunctioning or related lines or fittings restricted.	Run Service Diagnostics and check Vent Valve operation and check for debris in Valve and related lines and fittings.	Clean or replace Vent Valve, related lines and fittings (Refer to para 4.27).
		Pressure Transducer out of calibration. A pressure transducer or P.C. Board were recently replaced and unit was not calibrated.	Getting frequent codes that an inaccurate pressure reading would contribute to.	Calibrate the Temperature / Pressure Settings (Refer to para 2.3).
		Pressure Transducer malfunctioning.	• Check Pressure Transducer ribbon cable at J14 connector on P.C. Board to assure connector is secure. • Disconnect Pressure Transducer connector from J14 plug and check for 5.0 VDC at pins 1 & 2 when power is applied to P.C. Board. (Refer to P.C. Board Schematic, Section 5).	If Pressure Transducer connector is secure and 5.0 VDC is present at pins 1 & 2 replace Pressure Transducer (Refer to para 4.18).
		P.C. Board malfunctioning.	Disconnect Pressure Transducer connector from J14 plug and check for 5.0 VDC at pins 1 & 2 when power is applied to P.C. Board.(Refer to P.C. Board Schematic, Section 5).	If 5.0 VDC is not present when voltage is applied to P.C. board replace board (Refer to para 4.22). **Always** run Service Diagnostics (Para 2.2) before replacing P.C. Board.
Code C660 (Type: *FATAL*) **Note**: When a Code ends in "0" it means unit had a supply power interruption. The operator could have unplug the unit when a previous Code was displayed. Always go to Service Diagnostics and check previous 5 codes that are displayed.	**C660: POWER UP MODE PRESSURE HARDWARE** **UNPLUG / RE-PLUG UNIT** Pressure A/ D converter reports an average value outside the limits for normal operation during POWER UP mode.	May be due to a malfunction that occurred previously to Code displayed.	Go to Service Diagnostics and check previous 5 displayed codes.	Refer to Code Numbers in Troubleshooting Guide to determine correction.
		Pressure Transducer malfunctioning.	• Check Pressure Transducer ribbon cable at J14 connector on P.C. Board to assure connector is secure. • Disconnect Pressure Transducer connector from J14 plug and check for 5.0 VDC at pins 1 & 2 when power is applied to P.C. Board. (Refer to P.C. Board Schematic, Section 5).	If Pressure Transducer connector is secure and 5.0 VDC is present at pins 1 & 2 replace Pressure Transducer (Refer to para 4.18).
		P.C. Board malfunctioning.	Disconnect Pressure Transducer connector from J14 plug and check for 5.0 VDC at pins 1 & 2 when power is applied to P.C. Board.(Refer to P.C. Board Schematic, Section 5).	If 5.0 VDC is not present when voltage is applied to P.C. board replace board (Refer to para 4.22). **Always** run Service Diagnostics (Para 2.2) before replacing P.C. Board.

Table 2-5. Troubleshooting Guide

Problem	Display / Symptom	Probable Cause	Check	Correction
Code C661 SELECT **Code C662 FILL** **Code C663 HEATUP** **Code C664 STERILIZE** **Code C665 VENT** **Code C666 DOOR** **Code C667 DRY** (Type: *FATAL*)	*(Refer to column on left for codes and description)* **C66X: XXXXXX MODE PRESSURE HARDWARE** **UNPLUG / RE-PLUG UNIT** Pressure A/ D converter reports an average value outside the limits for normal operation during specific mode.	Pressure Transducer malfunctioning.	• Check Pressure Transducer ribbon cable at J14 connector on P.C. Board to assure connector is secure. • Disconnect Pressure Transducer connector from J14 plug and check for 5.0 VDC at pins 1 & 2 when power is applied to P.C. Board. (Refer to P.C. Board Schematic, Section 5).	If Pressure Transducer connector is secure and 5.0 VDC is present at pins 1 & 2 replace Pressure Transducer (Refer to para 4.18).
		P.C. Board malfunctioning.	Disconnect Pressure Transducer connector from J14 plug and check for 5.0 VDC at pins 1 & 2 when power is applied to P.C. Board.(Refer to P.C. Board Schematic, Section 5).	If 5.0 VDC is not present when voltage is applied to P.C. board replace board (Refer to para 4.22). **Always** run Service Diagnostics (Para 2.2) before replacing P.C. Board.
Code C670 (Type: *FATAL*) **Note**: When a Code ends in "0" it means unit had a supply power interruption. The operator could have unplug the unit when a previous Code was displayed. Always go to Service Diagnostics and check previous 5 codes that are displayed.	**C670: POWER UP MODE PRESSURE OVERLIM** **UNPLUG / RE-PLUG UNIT** Gauge pressure inside chamber is greater than 34.8 PSIG (240 kPa) during POWER UP mode.	May be due to a malfunction that occurred previously to Code displayed.	Go to Service Diagnostics and check previous 5 displayed codes.	Refer to Code Numbers in Troubleshooting Guide to determine correction.
		Pressure Transducer malfunctioning.	• Check Pressure Transducer ribbon cable at J14 connector on P.C. Board to assure connector is secure. • Disconnect Pressure Transducer connector from J14 plug and check for 5.0 VDC at pins 1 & 2 when power is applied to P.C. Board. (Refer to P.C. Board Schematic, Section 5).	If Pressure Transducer connector is secure and 5.0 VDC is present at pins 1 & 2 replace Pressure Transducer (Refer to para 4.18).
		Pressure Transducer out of calibration. A pressure transducer or P.C. Board were recently replaced and unit was not calibrated.	Getting frequent codes that an inaccurate pressure reading would contribute to.	Calibrate the Temperature / Pressure Settings. (Refer to para 2.3).
		Vent Valve malfunctioning or related lines or fittings restricted.	Run Service Diagnostics and check Vent Valve operation and check for debris in Valve and related lines and fittings.	Clean or replace Vent Valve, related lines and fittings (Refer to para 4.27).
		P.C. Board malfunctioning.	Disconnect Pressure Transducer connector from J14 plug and check for 5.0 VDC at pins 1 & 2 when power is applied to P.C. Board.(Refer to P.C. Board Schematic, Section 5).	If 5.0 VDC is not present when voltage is applied to P.C. board replace board (Refer to para 4.22). **Always** run Service Diagnostics (Para 2.2) before replacing P.C. Board.

© Midmark Corporation 1999 SF-1597

Table 2-5. Troubleshooting Guide

Problem	Display / Symptom	Probable Cause	Check	Correction
Code C671 (Type: *FATAL*)	**C671: SELECT MODE PRESSURE OVERLIM** **UNPLUG / RE-PLUG UNIT** Gauge pressure inside chamber is greater than 34.8 PSIG (240 kPa) during FILL mode.	Pressure Transducer malfunctioning.	• Check Pressure Transducer ribbon cable at J14 connector on P.C. Board to assure connector is secure. • Disconnect Pressure Transducer connector from J14 plug and check for 5.0 VDC at pins 1 & 2 when power is applied to P.C. Board. (Refer to P.C. Board Schematic, Section 5).	If Pressure Transducer connector is secure and 5.0 VDC is present at pins 1 & 2 replace Pressure Transducer (Refer to para 4.18).
		Pressure Transducer out of calibration. A pressure transducer or P.C. Board were recently replaced and unit was not calibrated.	Getting frequent codes that an inaccurate pressure reading would contribute to.	Calibrate the Temperature / Pressure Settings. (Refer to para 2.3).
		Vent Valve malfunctioning or related lines or fittings restricted.	Run Service Diagnostics and check Vent Valve operation and check for debris in Valve and related lines and fittings.	Clean or replace Vent Valve, related lines and fittings (Refer to para 4.27).
		P.C. Board malfunctioning.	Disconnect Pressure Transducer connector from J14 plug and check for 5.0 VDC at pins 1 & 2 when power is applied to P.C. Board.(Refer to P.C. Board Schematic, Section 5).	If 5.0 VDC is not present when voltage is applied to P.C. board replace board (Refer to para 4.22). **Always** run Service Diagnostics (Para 2.2) before replacing P.C. Board.
Code C672 (Type: *FATAL*)	**C672: FILL MODE PRESSURE OVERLIM** **ITEMS NOT STERILE UNPLUG / RE-PLUG UNIT** Gauge pressure inside chamber is greater than 34.8 PSIG (240 kPa) during FILL mode.	Air Valve malfunctioning.	Check operation of Air Valve by running Service Diagnostics and check coil resistance. Refer to Schematic of Main P.C. Board.	Replace Air Valve Assembly (Refer to para 4.24).
		Pressure Transducer malfunctioning.	• Check Pressure Transducer ribbon cable at J14 connector on P.C. Board to assure connector is secure. • Disconnect Pressure Transducer connector from J14 plug and check for 5.0 VDC at pins 1 & 2 when power is applied to P.C. Board. (Refer to P.C. Board Schematic, Section 5).	If Pressure Transducer connector is secure and 5.0 VDC is present at pins 1 & 2 replace Pressure Transducer (Refer to para 4.18).
		Pressure Transducer out of calibration. A pressure transducer or P.C. Board were recently replaced and unit was not calibrated.	Getting frequent codes that an inaccurate pressure reading would contribute to.	Calibrate the Temperature / Pressure Settings (Refer to para 2.3).
		P.C. Board malfunctioning.	Disconnect Pressure Transducer connector from J14 plug and check for 5.0 VDC at pins 1 & 2 when power is applied to P.C. Board.(Refer to P.C. Board Schematic,Section 5).	If 5.0 VDC is not present when voltage is applied to P.C. board replace board (Refer to para 4.22). **Always** run Service Diagnostics (Para 2.2) before replacing P.C. Board.

Table 2-5. Troubleshooting Guide

Problem	Display / Symptom	Probable Cause	Check	Correction
Code C673 (Type: *FATAL*)	**C673: HEATUP MODE PRESSURE OVERLIM** **ITEMS NOT STERILE UNPLUG / RE-PLUG UNIT** Gauge pressure inside chamber is greater than 34.8 PSIG (240 kPa) during HEATUP mode.	Air Valve malfunctioning.	Check operation of Air Valve by running Service Diagnostics and check coil resistance. Refer to Schematic of Main P.C. Board.	Replace Air Valve Assembly (Refer to para 4.24).
		Pressure Transducer malfunctioning.	• Check Pressure Transducer ribbon cable at J14 connector on P.C. Board to assure connector is secure. • Disconnect Pressure Transducer connector from J14 plug and check for 5.0 VDC at pins 1 & 2 when power is applied to P.C. Board. (Refer to P.C. Board Schematic, Section 5).	If Pressure Transducer connector is secure and 5.0 VDC is present at pins 1 & 2 replace Pressure Transducer (Refer to para 4.18).
		Pressure Transducer out of calibration. A pressure transducer or P.C. Board were recently replaced and unit was not calibrated.	Getting frequent codes that an inaccurate pressure reading would contribute to.	Calibrate the Temperature / Pressure Settings (Refer to para 2.3).
		Temperature RTD out of calibration. A Temperature Sensor or P.C. Board were recently replaced.	Getting frequent C554 or other codes due to an inaccurate steam temperature.	Calibrate the Temperature / Pressure Settings (Refer to para 2.3).
		Steam Temperature Sensor (RTD), located on side of chamber, malfunctioning.	Remove plug connector at J5 on P.C. Board and check resistance value (ohms) of RTD. Resistance values should be between the following: 75°F (23°C) = 1090 ohms. 545°F (285°C) = 2066 ohms. *Above values +/- 10 Ohms*	If Steam Temperature probe shows open or values outside resistance ranges replace probe (Refer to para 4.19).
		P.C. Board malfunctioning.	Disconnect Pressure Transducer connector from J14 plug and check for 5.0 VDC at pins 1 & 2 when power is applied to P.C. Board.(Refer to P.C. Board Schematic, Section 5).	If 5.0 VDC is not present when voltage is applied to P.C. board replace board (Refer to para 4.22). **Always** run Service Diagnostics (Para 2.2) before replacing P.C. Board.
Code C674 (Type: *FATAL*)	**C674: STERILIZE MODE PRESSURE OVERLIM** **ITEMS NOT STERILE UNPLUG / RE-PLUG UNIT** Gauge pressure inside chamber is greater than 34.8 PSIG (240 kPa) during STERILIZE mode.	Air Valve malfunctioning.	Check operation of Air Valve by running Service Diagnostics and check coil resistance. Refer to Schematic of Main P.C. Board.	Replace Air Valve Assembly (Refer to para 4.24).

Table 2-5. Troubleshooting Guide

Problem	Display / Symptom	Probable Cause	Check	Correction
Code C674 *(Continued)* (Type: *FATAL*)	*(Continued)* **C674: STERILIZE MODE PRESSURE OVERLIM** **ITEMS NOT STERILE UNPLUG / RE-PLUG UNIT** Gauge pressure inside chamber is greater than 34.8 PSIG (240 kPa) during STERILIZE mode.	Pressure Transducer malfunctioning.	• Check Pressure Transducer ribbon cable at J14 connector on P.C. Board to assure connector is secure. • Disconnect Pressure Transducer connector from J14 plug and check for 5.0 VDC at pins 1 & 2 when power is applied to P.C. Board. (Refer to P.C. Board Schematic, Section 5).	If Pressure Transducer connector is secure and 5.0 VDC is present at pins 1 & 2 replace Pressure Transducer (Refer to para 4.18).
		Pressure Transducer out of calibration. A pressure transducer or P.C. Board were recently replaced and unit was not calibrated.	Getting frequent codes that an inaccurate pressure reading would contribute to.	Calibrate the Temperature / Pressure Settings (Refer to para 2.3)
		Temperature RTD out of calibration. A Temperature Sensor or P.C. Board were recently replaced.	Getting frequent C554 or other codes due to an inaccurate steam temperature.	Calibrate the Temperature / Pressure Settings (Refer to para 2.3)
		Steam Temperature Sensor (RTD), located on side of chamber, malfunctioning.	Remove plug connector at J5 on P.C. Board and check resistance value (ohms) of RTD. Resistance values should be between the following: 75°F (23°C) = 1090 ohms. 545°F (285°C) = 2066 ohms. *Above values +/- 10 Ohms*	If Steam Temperature probe shows open or values outside resistance ranges replace probe (Refer to para 4.19).
		Solid State Relay (SSR) shorted causing power being supplied to heaters constantly.	• Disconnect power from unit. • Remove line voltage leads from terminals 1 & 2 of SSR, place terminals out of way to prevent electrical shock. • Place meter probes on terminals 1 & 2 and check ohms. • Run Service Diagnostics, go to Steam and Auxiliary Heater Test. When Heaters are on (switch is closed) apprx. 700 ohms should register on meter.	If ohms value did not register on meter when heaters were energized replace Solid State Relay (SSR) (Refer to para 4.15).
		P.C. Board malfunctioning.	Disconnect Pressure Transducer connector from J14 plug and check for 5.0 VDC at pins 1 & 2 when power is applied to P.C. Board.(Refer to P.C. Board Schematic, Section 5).	If 5.0 VDC is not present when voltage is applied to P.C. board replace board (Refer to para 4.22). **Always** run Service Diagnostics (Para 2.2) before replacing P.C. Board.

Table 2-5. Troubleshooting Guide

Problem	Display / Symptom	Probable Cause	Check	Correction
Code C675 VENT **Code C676 DOOR** (Type: *FATAL*)	*(Refer to column on left for codes and description)* **C67X: XXXXXX MODE PRESSURE OVERLIM** **ITEMS NOT STERILE * UNPLUG / RE-PLUG UNIT** *No message on this line unless it occurs during Venting because of a Temp Reg Warning. Gauge pressure inside chamber is greater than 34.8 PSIG (240 kPa) during VENT mode.	Filter screen in trough restricted.	Remove filter screen and check condition.	Clean or replace filter screen.
		Vent Valve malfunctioning or related lines or fittings restricted.	Run Service Diagnostics and check Vent Valve operation and check for debris in Valve and related lines and fittings.	Clean or replace Vent Valve, related lines and fittings (Refer to para 4.27).
		Pressure Transducer malfunctioning.	• Check Pressure Transducer ribbon cable at J14 connector on P.C. Board to assure connector is secure. • Disconnect Pressure Transducer connector from J14 plug and check for 5.0 VDC at pins 1 & 2 when power is applied to P.C. Board. (Refer to P.C. Board Schematic, Section 5).	If Pressure Transducer connector is secure and 5.0 VDC is present at pins 1 & 2 replace Pressure Transducer (Refer to para 4.18).
		Pressure Transducer out of calibration. A pressure transducer or P.C. Board were recently replaced and unit was not calibrated.	Getting frequent codes that an inaccurate pressure reading would contribute to.	Calibrate the Temperature / Pressure Settings (Refer to para 2.3).
		P.C. Board malfunctioning.	Disconnect Pressure Transducer connector from J14 plug and check for 5.0 VDC at pins 1 & 2 when power is applied to P.C. Board.(Refer to P.C. Board Schematic, Section 5).	If 5.0 VDC is not present when voltage is applied to P.C. board replace board (Refer to para 4.22). **Always** run Service Diagnostics (Para 2.2) before replacing P.C. Board.
Code C677 (Type: *FATAL*)	**C677: DRY MODE PRESSURE OVERLIM** **UNPLUG / RE-PLUG UNIT** Gauge pressure inside chamber is greater than 34.8 PSIG (240 kPa) during DRY mode.	Door did not fully open even though latch released allowing chamber to retain a slight pressure. Door Gasket may have stuck due to abnormally high temperatures at Start-up (230° F or above) due to running back-to-back cycles over a period of time.	Run Service Diagnostics to check component operation. Check amount of cycles (back-to-back) Operator ran before problem occurred. Check condition of door gasket.	If door gasket is worn or dirty clean or replace gasket (Refer to para 4.10). Inform Operator that problem could occur when back-to-back cycles have been ran and Start-up temperature is 230° F or above.
		Vent Valve malfunctioning or related lines or fittings restricted.	Run Service Diagnostics and check Vent Valve operation and check for debris in Valve and related lines and fittings.	Clean or replace Vent Valve, related lines and fittings (Refer to para 4.27).
		Pressure Transducer malfunctioning.	• Check Pressure Transducer ribbon cable at J14 connector on P.C. Board to assure connector is secure. • Disconnect Pressure Transducer connector from J14 plug and check for 5.0 VDC at pins 1 & 2 when power is applied to P.C. Board. (Refer to P.C. Board Schematic, Section 5).	If Pressure Transducer connector is secure and 5.0 VDC is present at pins 1 & 2 replace Pressure Transducer (Refer to para 4.18).

Table 2-5. Troubleshooting Guide

Problem	Display / Symptom	Probable Cause	Check	Correction
Code C677 *(Continued)* (Type: *FATAL*)	*(Continued)* **C677: DRY MODE PRESSURE OVERLIM** **UNPLUG / RE-PLUG UNIT** Gauge pressure inside chamber is greater than 34.8 PSIG (240 kPa) during DRY mode.	Pressure Transducer out of calibration. A pressure transducer or P.C. Board were recently replaced and unit was not calibrated.	Getting frequent codes that an inaccurate pressure reading would contribute to.	Calibrate the Temperature / Pressure Settings (Refer to para 2.3).
		P.C. Board malfunctioning.	Disconnect Pressure Transducer connector from J14 plug and check for 5.0 VDC at pins 1 & 2 when power is applied to P.C. Board.(Refer to P.C. Board Schematic, Section 5).	If 5.0 VDC is not present when voltage is applied to P.C. board replace board (Refer to para 4.22). **Always** run Service Diagnostics (Para 2.2) before replacing P.C. Board.
Code C980 (Type: *FATAL*) **Note**: When a Code ends in "0" it means unit had a supply power interruption. The operator could have unplug the unit when a previous Code was displayed. Always go to Service Diagnostics and check previous 5 codes that are displayed.	**C980: POWER UP MODE HI-LIMIT OPEN** **UNPLUG / RE-PLUG UNIT** Steam and / or Aux. High Limit switch has opened for at least 1/4 second during POWER UP mode.	May be due to a malfunction that occurred previously to Code displayed.	Go to Service Diagnostics and check previous 5 displayed codes.	Refer to Code Numbers in Troubleshooting Guide to determine correction.
		Water level of reservoir is covering outlet of condensing coil. Water siphons back into chamber trough resulting in low Auxiliary (trough) temperature.	Check if condensing coil outlet is beneath water level in reservoir.	Inform operator not to over fill reservoir. If reservoir is not over filled but coil outlet is submerged, bend coil so outlet is a maximum of 1 7/8" below top of lid opening. Do not allow coil to touch top or sides of reservoir.
		Lower and / or Upper High Limit Switch(es) are weak and open prematurely.	Disconnect power and check continuity across high limit switches. Limits open at 475° F (246° C) +/- 25° F (-4° C) Close at 395° F (202° C) +/- 25° F (-4° C)	If continuity is not present and temperature at limit is below the Limits "Open" temperature replace Limit Switch (Refer to para 4.28 or 4.29).
		Lower and / or Upper High Limit Switch(es) opened normally due to temperature surpassing 475° F (246° C) +/- 25° F (- 4° C)	Disconnect power and allow unit to cool. Run Service Diagnostics and check individual components especially SSR, and Main relay to assure they are functioning correctly.	If a component malfunctioned, producing the overheat condition, repair or replace the specific component.
		Wire or connector(s) at High Limit Switch(es) loose, disconnected or broken.	Check conditions of all connectors and related wires.	Repair or replace connectors or wires. Refer to Section 5 for Schematics.
		Insulation between High Limit Switch(es) and chambler surface has deteriorated.	Check condition of insulation pad between limit face and chamber surface.	Replace insulation or Limit Switch (Refer to para 4.28 or 4.29).
		P.C. Board malfunctioning.	Run Service Diagnostics and make various voltage checks as indicated on P.C. Schematic.	Replace P.C. Board (Refer to para 4.22). **Always** run Service Diagnostics (Para 2.2) before replacing P.C. Board.

© Midmark Corporation 1999 SF-1597 Rev. (10/02)

Printed in U.S.A.

Table 2-5. Troubleshooting Guide

Problem	Display / Symptom	Probable Cause	Check	Correction
Code C981 SELECT **Code C982** FILL **Code C983** HEATUP **Code C984** STERILIZE **Code C985** VENT **Code C986** DOOR (Type: *FATAL*)	*(Refer to column on left for codes and description)* **C98X:XXXXXX MODE HI-LIMIT OPEN** **UNPLUG / RE-PLUG UNIT** Steam and / or Aux. High Limit switch has opened for at least 1/4 second during specific mode.	Lower and / or Upper High Limit Switch(es) are weak and open prematurely.	Disconnect power and check continuity across high limit switches. Limits open at 475° F (246° C) +/- 25° F (-4° C) Close at 395° F (202° C) +/- 25° F (-4° C)	If continuity is not present and temperature at limit is below the Limits “Open” temperature replace Limit Switch (Refer to para 4.28 or 4.29).
		Lower and / or Upper High Limit Switch(es) opened normally due to temperature surpassing 475° F (246° C) +/- 25° F (- 4° C)	Disconnect power and allow unit to cool. Run Service Diagnostics and check individual components especially SSR, and Main relay to assure they are functioning correctly.	If a component malfunctioned, producing the overheat condition, repair or replace the specific component.
		Wire or connector(s) at High Limit Switch(es) loose, disconnected or broken.	Check conditions of all connectors and related wires.	Repair or replace connectors or wires. Refer to Section 5 for Schematics.
		Insulation between High Limit Switch(es) and chamber surface has deteriorated.	Check condition of insulation pad between limit face and chamber surface.	Replace insulation or Limit Switch (Refer to para 4.28 or 4.29).
		P.C. Board malfunctioning.	Run Service Diagnostics and make various voltage checks as indicated on P.C. Schematic.	Replace P.C. Board (Refer to para 4.22). **Always** run Service Diagnostics (Para 2.2) before replacing P.C. Board.
Code C987 (Type: *FATAL*)	**C987: DRY MODE HI-LIMIT OPEN** **UNPLUG / RE-PLUG UNIT** Steam and / or Aux. High Limit switch has opened for at least 1/4 second during DRY mode.	Water level of reservoir is covering outlet of condensing coil. Water siphons back into chamber trough resulting in low Auxiliary (trough) temperature but high temperatures on upper heating element, causing upper limit switch to open.	Check if condensing coil outlet is beneath water level in reservoir.	Inform operator not to over fill reservoir. If reservoir is not over filled but coil outlet is submerged, bend coil so outlet is a maximum of 1 7/8” below top of lid opening. Do not allow coil to touch top or sides of reservoir.
		Lower and / or Upper High Limit Switch(es) are weak and open prematurely.	Disconnect power and check continuity across high limit switches. Limits open at 475° F (246° C) +/- 25° F (-4° C) Close at 395° F (202° C) +/- 25° F (-4° C)	If continuity is not present and temperature at limit is below the Limits “Open” temperature replace Limit Switch (Refer to para 4.28 or 4.29).
		Lower and / or Upper High Limit Switch(es) opened normally due to temperature surpassing 475° F (246° C) +/- 25° F (- 4° C)	Disconnect power and allow unit to cool. Run Service Diagnostics and check individual components especially SSR, and Main relay to assure they are functioning correctly.	If a component malfunctioned, producing the overheat condition, repair or replace the specific component.
		Wire or connector(s) at High Limit Switch(es) loose, disconnected or broken.	Check conditions of all connectors and related wires.	Repair or replace connectors or wires (Refer to para 4.28 or 4.29).
		Insulation between High Limit Switch(es) and chambler surface has deteriorated.	Check condition of insulation pad between limit face and chamber surface.	Replace insulation or Limit Switch (Refer to para 4.28 or 4.29).

© Midmark Corporation 1999 SF-1597 Rev. (10/02)

Printed in U.S.A.

Table 2-5. Troubleshooting Guide

Problem	Display / Symptom	Probable Cause	Check	Correction
Code C987 *(Continued)* (Type: *FATAL*)	*(Continued)* **]C987: DRY MODE HI-LIMIT OPEN** **UNPLUG / RE-PLUG UNIT** Steam and / or Aux. High Limit switch has opened for at least 1/4 second during DRY mode.	P.C. Board malfunctioning.	Run Service Diagnostics and make various voltage checks as indicated on P.C. Schematic.	Replace P.C. Board (Refer to para 4.22). **Always** run Service Diagnostics (Para 2.2) before replacing P.C. Board.
(Non-Coded Errors) **Sterilizer not drying instruments properly.**	Instruments are wet after drying cycle is complete.	Sterilizer overloaded	Check that pressure vessel is not overloaded with heavy linen packs.	Remove packs, allow unit to cool and run a cycle. Instruct operator to reduce load size.
		Operator fully opened or closed the door before Dry Cycle was complete.	Have Operator run a cycle and check if door is being fully opened or closed before Dry Cycle is complete.	Explain proper operation to assure adequate drying.
		Sterilizer not level allowing additional water to accumulate in chamber.	Check sterilizer for level.	Level unit.
		Chamber Filter clogged preventing all the water from venting to reservoir.	Check condition of filter.	Clean or replace filter (Refer to para 4-9).
		Vent Valve malfunctioning or related lines or fittings restricted.	Run Service Diagnostics and check Vent Valve operation and check for debris in Valve and related lines and fittings.	Clean or replace Vent Valve, related lines and fittings (Refer to para 4.27).
		Heater(s) not functioning.	Run Service Diagnostics and check operation of both heaters, main relay, SSR, and various components.	Replace malfunctioning heater(s) or related component(s).
		Lower and / or Upper High Limit Switch(es) are stuck in an “open” position.	Disconnect power and check continuity across high limit switches. Limits open at 475° F (246° C) +/- 25° F (-4° C) Close at 395° F (202° C) +/- 25° F (-4° C)	If continuity is not present and temperature at limit is below the Limits “Open” temperature replace Limit Switch (Refer to para 4.28 or 4.29).
		Solid State Relay (SSR) malfunctioning.	• Disconnect power from unit. • Remove line voltage leads from terminals 1 & 2 of SSR, place terminals out of way to prevent electrical shock. • Place meter probes on terminals 1 & 2 and check ohms. • Run Service Diagnostics, go to Steam and Auxiliary Heater Test. When Heaters are on (switch is closed) apprx. 700 ohms should register on meter.	If ohms value did not register on meter when heaters were energized replace Solid State Relay (SSR) (Refer to para 4.15).
		Main Relay malfunctioning.	Run Service Diagnostics, Main Relay Test, Steam & Auxiliary Heater Test.	If Main Relay did not function correctly replace Relay (Refer to para 4.16).

Table 2-5. Troubleshooting Guide

Problem	Display / Symptom	Probable Cause	Check	Correction
(Non-Coded Errors) **Biological indicator strip designates unit not sterilizing.**	Positive biological indicator. No color change, or incomplete change has occurred on chemical indicator strip. No color change, or incomplete change has occurred on chemical indicator strip.	Sterilizer overloaded	Check that pressure vessel is not overloaded with heavy linen packs.	Remove packs, allow unit to cool and run a cycle. Instruct operator to reduce load size.
		Improper operation.	Procedures used by operator(s).	Demonstrate Normal Operation to operator(s).
		Using trays for instruments not manufacturered for sterilizer. Does not get proper air flow or steam penetration.	Check style of instrument trays being used.	Explain to operator(s) to use only trays manufactured for use in M4•9 sterilizer.
		Wrong type of biological indicator being used for this type sterilizer.	Check biological indicator to assure it is for gravity type sterilizers and correct for the cycle times and temperatures being run.	Contact supplier of biological indicator to acquire correct indicators. Review Installation / Operation Manual for correct procedures.
		Chemical indicator strip has come into contact with water in the sterilizer.	Check with operator on positioning of indicator strip in sterilizer.	Explain to operator correct positioning to prevent direct contact with water.
		Indicator strips are being stored in damp and / or hot environment.	Check condition of area where indicators are stored.	Inform operator to follow storage recommendation of indicator manufacturer.
Maintenance Message is displayed.	**PERFORM MONTHLY MAINTENANCE**	Sterilizer software senses that the cycle count has reached some multiple of 160.	Check unit and refer to Installation / Operation manual for correct maintenance procedures.	Perform monthly maintenance per I/O manual.
	PERFORM WEEKLY MAINTENANCE	Sterilizer software senses that the cycle count has reached some multiple of 40.	Check unit and refer to Installation / Operation manual for correct maintenance procedures.	Perform weekly maintenance per I/O manual.
Printer (Optional) does not print.	Printer does not generate data.	Printer is out of paper.	Lift printer cover and check condition of paper.	Install new roll of paper (refer to I/O manual).
		Cartridge ribbon is dry.	Check condition of cartridge ribbon.	Install a new cartridge ribbon (refer to I/O manual).
		Printer wire harness is disconnected.	Check if printer harness is plugged in on terminal pins of printer and on plug J8 of main p.c. board.	Plug wire harness in at printer connection and / or plug J8 or main p.c. board (refer to I/O manual.
		Printer wire harness has broken or open lead.	Check continuity of leads on wire harness.	Replace printer wire harness.
		Printer is malfunctioning.	Check for 5 VDC on pins 7 & 8 at Printer.	If voltage is present, replace printer.
			Check for 5 VDC on pins 7 & 8 at plug J8 on main p.c. board.	If no voltage is present replace main p.c. board (Refer to para 4.22).

SECTION III
SCHEDULED MAINTENANCE

3.1 Scheduled Maintenance

Table 3-1 is a Scheduled Maintenance Chart which lists the inspections and services that should be performed periodically on the Model M4•9 Sterilizer. These inspections and services should be performed as often as indicated in the chart.

Also, periodically the display on the Sterilizer will inform the operator that either a Weekly or Monthly Maintenance is required. The Weekly Maintenance display occurs when the Sterilizer software senses that the cycle count has reached some multiple of 40 cycles. Monthly Maintenance is displayed when the cycle counts reaches a multiple of 160 cycles.

Interval	Inspection or Service	What to Do
Weekly (Maintenance should be performed by Operator).	Clean Chamber and Trays.	Drain water from the Sterilizer using drain tube in front of unit. Allow unit to cool to prevent burns. Wash inside of chamber and trays with a solution of mild soap or Speed-Clean® and distilled water. Remove any debris in or around the mesh filter in the trough of the chamber and rinse the filter. Wipe off the door gasket and mating surfaces using a damp cloth and inspect gasket for damage. Replace gasket if necessary. Refer to Installation / Operation Manual.
Monthly (Maintenance should be performed by Operator).	Clean and flush the chamber and related plumbing. Wipe off trays.	Using Speedclean®, clean the chamber and related plumbing. Refer to the Installation / Operation Manual, Operator Maintenance for Monthly cleaning procedures.
Semi-annually	Obvious damage	Visually check condition of sterilizer for obvious damage such as: cracks in components, missing components, dents in components, or any other visible damage which would cause sterilizer to be unsafe to operate or would compromise its performance. Repair sterilizer as necessary.
	Fasteners / hardware	Check for missing or loose fasteners / hardware. Replace any missing hardware and tighten any loose hardware as necessary.
	Warning and instructional decals	Check for missing or illegible decals. Replace decals as necessary.
	Pivot points / moving parts.	Lubricate all exposed pivot points, and moving parts with high temperature, non-toxic, silicone based lubricant.
	Display Overlay	Check for missing, damaged, or illegible display overlay. Replace display overlay if necessary.
	Wiring Connections	Check condition of all wiring connections. Clean, tighten or replace any dirty, loose, or damaged connections.
	Free movement of door latch.	Clean door latch with solvent. Lubricate door latch and door pins with high temperature, non-toxic, silicone grease.
	Door interlock switch operation.	Check to assure door switch is in proper adjustment and operates correctly (Refer to para 4.20).
	Door gasket	Check gasket for deterioration. Clean and, if necessary, replace gasket (Refer to para 4.10).
	Chamber mesh filter, Internal filter screen and vent muffler.	Inspect, clean or replace filters and muffler if necessary (Refer to para(s) 4.8, 4.9, 4.34).
	Water Level Sensor	Clean or replace water level sensor (Refer to para 4.33).
	Tubing	Inspect all tubing for cleanliness. Clean or replace if required.
	Reservoir	Inspect reservoir for cleanliness and clean or replace if required.
	Pressure Relief Valve	Perform a pressure relief valve check (Refer to para 4.25). Replace pressure relief valve if required (Refer to para 4.26)
	Printer (optional)	Check printer operation. Replace ribbon cartridge if required.
	Operational Test	Run a Normal Operation to determine if the sterilizer is operating within its specifications (Refer to para 2.1). If it is determined there is a problem run Service Diagnostic (Refer to para. 2.2) and review the Troubleshooting Guide (Refer to para 2.5) before replacing any components.
	Service Diagnostics Test	Run the Service Diagnostics (Refer to para. 2.2) to check the Main P.C. Board and various components.

© Midmark Corporation 1999 SF-1597

Printed in U.S.A.

Return To Table Of Contents

© Midmark Corporation 1999 SF-1597

Printed in U.S.A.

SECTION IV
MAINTENANCE / SERVICE INSTRUCTIONS

4.1 Introduction

WARNING
Always disconnect power cord from outlet before removing any sterilizer covers/panels or making any repairs to prevent possibility of electrical shock. Allow unit to cool and drain unit to prevent spillage during repairs. Failure to comply could result in personal injury.

NOTE
Perform an operational test on sterilizer after the repair is completed to confirm repair was properly made and that all malfunctions were repaired.

The following paragraphs contain removal, installation, repair, and adjustment procedures for M4•9 Sterilizer.

4.2 Side and Back Panels

A. Removal

WARNING
Always disconnect power cord from electrical receptacle before removing any sterilizer covers/panels or making any repairs to prevent possibility of electrical shock. Allow unit to cool and drain unit to prevent spillage during repairs. Failure to comply with could result in personal injury.

NOTE
All panels on the sterilizer can be removed or, if desired, individual panels. Refer to specific steps for individual panel removal.

(1) Unplug unit power cord from electrical receptacle.

(2) Remove six screws (1, Figure 4-1) from top cover (2).

(3) Remove three screws (3) and lockwashers (4) from back panel (5).

(4) Remove two side panels (6) by pulling outward and down on top edges of panels.

(5) Remove back panel (5) by pulling outward.

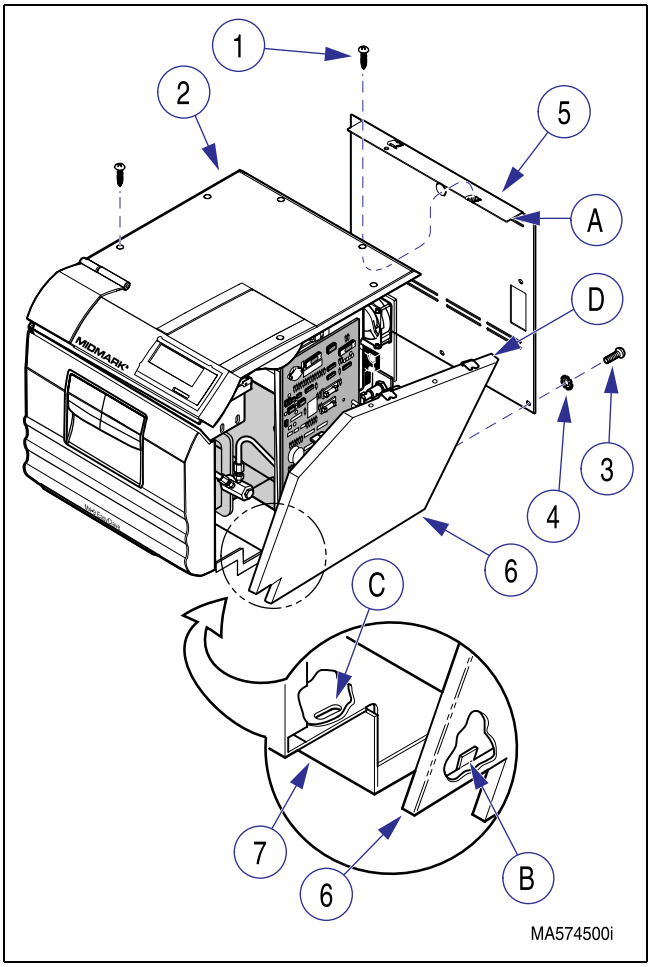

Figure 4-1. Side and Back Panels

B. Installation

(1) Position back panel (5, Figure 4-1) so lip (A) of back panel is under top cover (2).

(2) Insert three tabs (B) of side panel (6) into three slots (C) of base (7). Raise side panel (6) into position so lip (D) is under top cover (2) and side panel lip on outside of back panel. Repeat for other side panel.

(3) Secure side panels (6) and back panel (5) in position with six screws (1), three screws (3), and lockwashers (4).

(4) Plug unit power cord into electrical receptacle.

© Midmark Corporation 1999 SF-1597

Printed in U.S.A.

4.3 Top Cover

A. Removal

EQUIPMENT ALERT
Do not lift top cover until after connectors to Main PC board, pressure relief valve spring, and drain tube have been disconnected. Failure to comply may cause damage to unit.

(1) Remove side and back panels (Refer to para 4.2).

(2) Disconnect key ring (A, Figure 4-2) of lanyard assembly (1) from pressure relief valve (2).

(3) If unit has a printer assembly, disconnect printer cable (3) from connector J8 (4) on main control PC board (4). Pull printer cable (3) up thru wire slot (B) and remove printer assembly from top cover (5).

EQUIPMENT ALERT
Use care not to use excessive force when separating top cover from reservoir; the top cover could break. Also, top cover will still be attached to ribbon connector. Damage to ribbon connector or membrane board could result if top cover is yanked to far.

(4) Carefully break seal of silicone sealant from mating surfaces of top cover (5) and reservoir assembly (6) and then separate.

(5) Turn top cover (5) sideways and then disconnect ribbon connector (7) from membrane board (8).

(6) Clean all silicone sealant mating surfaces of top cover (5) and reservoir assembly (6).

NOTE
Perform the following steps only if top cover is being replaced.

(7) Pry open nylon clamp (9) and remove printer drain tube (10) from drain stem (C) of top cover (5).

(8) Open water fill cover (11) and then remove key ring (A) from wire loop (D). Remove compression spring (12) and lanyard (1) from top cover (5).

(9) Remove display PCB from top cover (Refer to para 4.4).

B. Installation

(1) If removed, install display PCB on top cover (Refer to para 4.4).

(2) If removed, insert lanyard assembly (1, Figure 4-2) thru top cover (5). Install compression spring (12) on lanyard (1) and secure with key ring (A).

(3) If removed, connect printer drain tube (10) to drain stem (C) and secure with nylon clamp (9).

(4) Place a bead of clear RTV sealant (732) at mating point (E) of top cover (5) and reservoir assembly (6).

(5) Connect ribbon connector (7) to connector on membrane board (8) and then position top cover (5) on unit.

(6) If unit has a printer assembly, install printer on top cover (5). Run printer cable (3) down thru wire slot (B) and then connect to connector J8 (4) on main control PC board.

NOTE
The following step is difficult. Use of a screwdriver to open up the key ring wire while using a needle nosed pliers to rotate the key ring onto the pressure relief valve stem is recommended.

(7) Connect key ring (A) of lanyard assembly (1) to pressure relief valve (2).

© Midmark Corporation 1999 SF-1597

Printed in U.S.A.

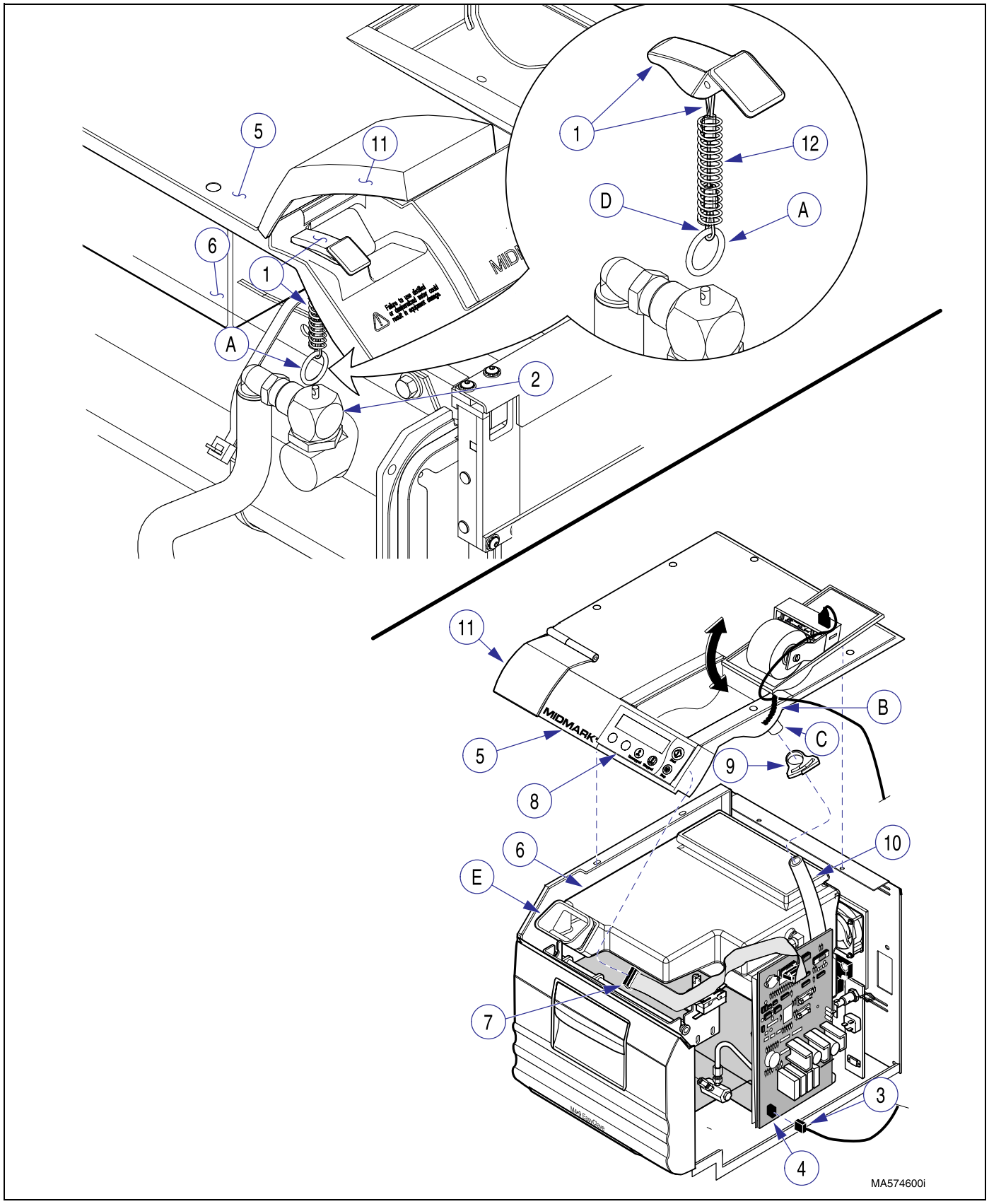

Figure 4-2. Top Cover

4.4 Display P.C. Board

A. Removal

WARNING
<u>Always</u> disconnect power cord from outlet receptacle before removing any sterilizer covers/panels or making any repairs to prevent possibility of electrical shock. Allow unit to cool and drain unit to prevent spillage during repairs. Failure to comply could result in personal injury.

(1) Unplug power cord from outlet receptacle.

(2) Remove top cover (Refer to para 4.3).

(3) Disconnect PC harness (1, Figure 4-3) from connector J3 (2) of display PCB (3).

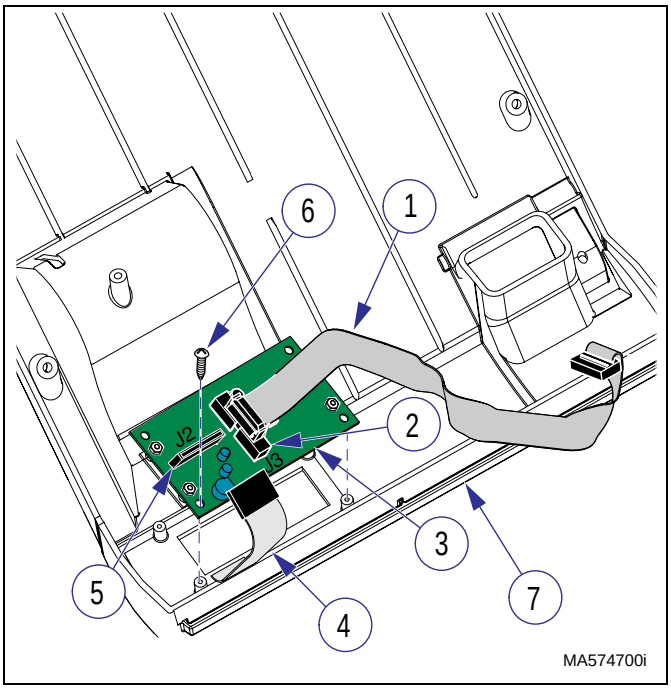

Figure 4-3. Display PCB

(4) Disconnect display harness (4) from connector J2 (5) of display PCB (3).

(5) Remove four screws (6) and display PCB (3) from top cover (7).

B. Installation

EQUIPMENT ALERT
Ensure display PCB is positioned on top cover so that display will be in upright position. An arrow indicating correct direction for UP is on front of display PCB next to digital display.

(1) Install display PCB (3, Figure 4-3) on top cover (7) and secure with four screws (6).

(2) Connect display harness (4) to connector J2 (5) of display PCB (3).

(3) Connect PC harness (1) to connector J3 (2) of display PCB (3).

(4) Install top cover (Refer to para 4.3).

(5) Plug unit power cord into outlet receptacle.

4.5 Decal Switch

A. Removal

WARNING
<u>Always</u> disconnect power cord from outlet receptacle before removing any sterilizer covers/panels or making any repairs to prevent possibility of electrical shock. Allow unit to cool and drain unit to prevent spillage during repairs. Failure to comply could result in personal injury.

(1) Unplug power cord from outlet receptacle.

(2) Remove top cover (Refer to para 4.3).

(3) Disconnect ribbon harness (1, Figure 4-4) from display PCB (2).

(4) Using sharp instrument, carefully remove decal switch (3) from front of top cover (4).

(5) Use an all citrus solvent / degreaser that does not harm plastics to remove all adhesive residue and then allow top cover to dry.

© Midmark Corporation 1999 SF-1597

Printed in U.S.A.

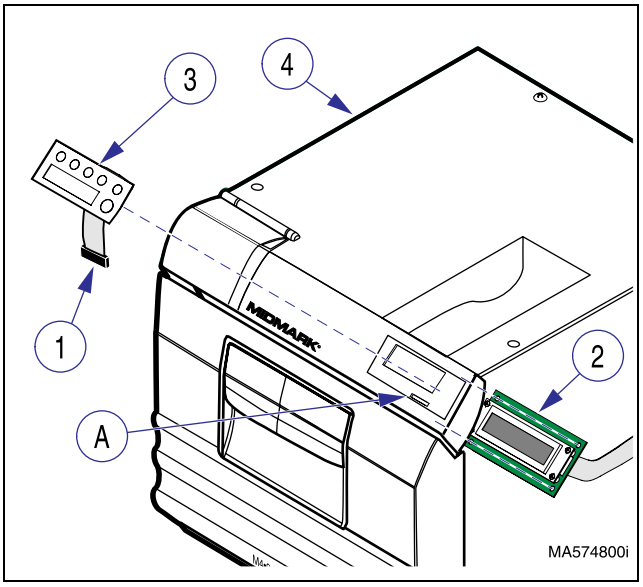

Figure 4-4. Decal Switch

B. Installation

(1) Peel protective backing from back side of new decal switch (3, Figure 4-4).

(2) Install new decal switch (3) on top cover (4), making sure ribbon harness (1) is fed thru wire slot (A).

(3) Connect ribbon harness (1) to connector on display PCB (2).

(4) Install top cover (Refer to para 4.3).

(5) Plug power cord into outlet receptacle.

4.6 Tray Rack and Trays

A. Removal

(1) Open sterilizer door.

(2) Pull bail (1, Figure 4-5) forward to eject trays (2).

(3) Remove tray(s) (2) from tray rack (3).

(4) While pressing in on both sides (A) of tray rack (3), lift up on tray rack and pull bail (1) and rack (3) from chamber.

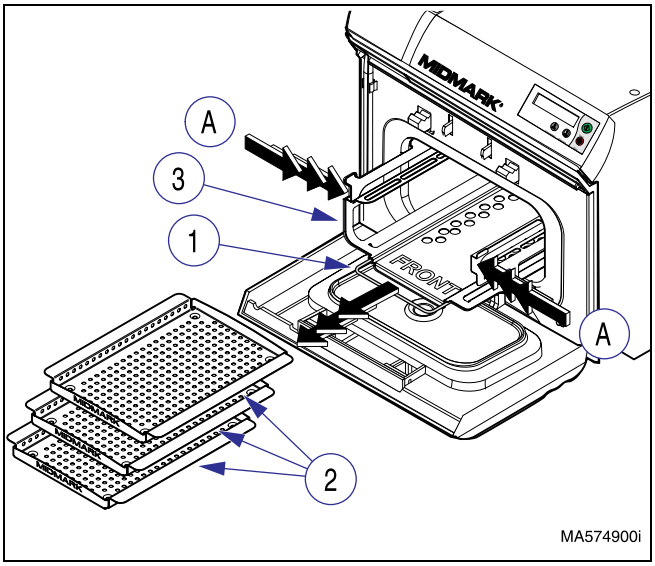

Figure 4-5. Tray Rack and Trays.

B. Installation

EQUIPMENT ALERT
Make sure tray rack (3, Figure 4-5) is not installed backwards. Failure to do so may cause water level sensor to be grounded to chamber, preventing chamber from filling during cycle. This would allow heating element to overheat and become damaged.

(1) Position the bail (1, Figure 4-5) under the tray rack (3). Make sure the front of the rack is positioned toward front of chamber.

(2) Holding tray rack (3) and bail (1) press in on both sides (A) of tray rack (3), slide tray rack into chamber, making sure tray rack is pushed in as far as it will go.

NOTE
Assure bail (1) moves freely and can be pulled forward approximately 1" (2.54 cm) to eject trays (2).

(3) Install tray(s) (2) onto tray rack (3).

(4) Close sterilizer door.

© Midmark Corporation 1999 SF-1597

Printed in U.S.A.

4.7 Draining / Filling Reservoir

A. Draining Sterilizer

NOTE
The reservoir capacity when full is approximately 1 gallon (3.8 liters). Assure container used to drain reservoir into is of adequate capacity.

(1) Open sterilizer door.

(2) Pull level indicator tube (1, Figure 4-6) loose from hose clips (2). Place tube in a suitable empty container or sink that is below level of sterilizer and drain reservoir.

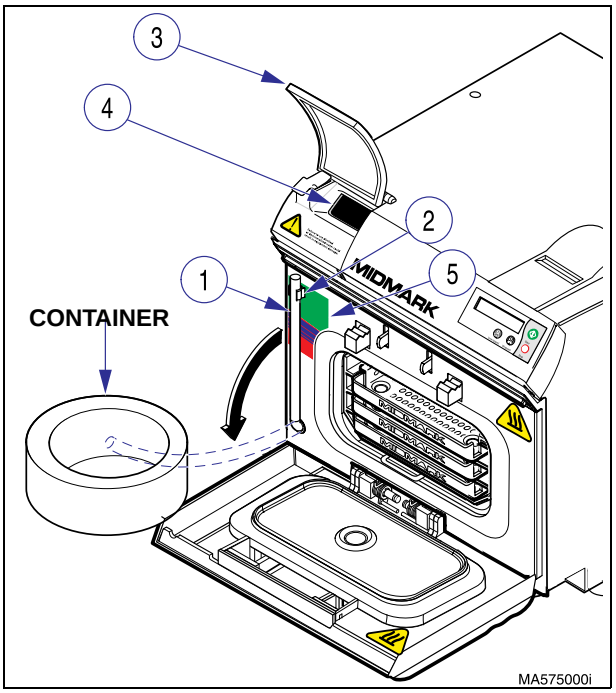

Figure 4-6. Draining / Filling Reservoir

B. Filling Sterilizer

(1) Position level indicator tube (1, Figure 4-6) securely in hose clips (2).

EQUIPMENT ALERT
Use only distilled water. The chlorine found in normal tap water has a severe corrosive effect on the stainless steel chamber. Failure to use distilled water may cause serious deterioration and premature failure of the stainless steel chamber which could result in serious injury or death.

(2) Open water fill cover (3).

(3) Pour distilled or demineralized water into fill opening (4) until water level found in level indicator tube (1) is at top of fill level label (5).

(4) Close water fill cover (3).

4.8 Internal Filter Screen

A. Removal

(1) Open sterilizer door.

(2) Remove tray rack and trays (Refer to para 4.6).

(3) Using a pointed instrument, pull filter screen (1, Figure 4-7) out of temp sensor cavity (A).

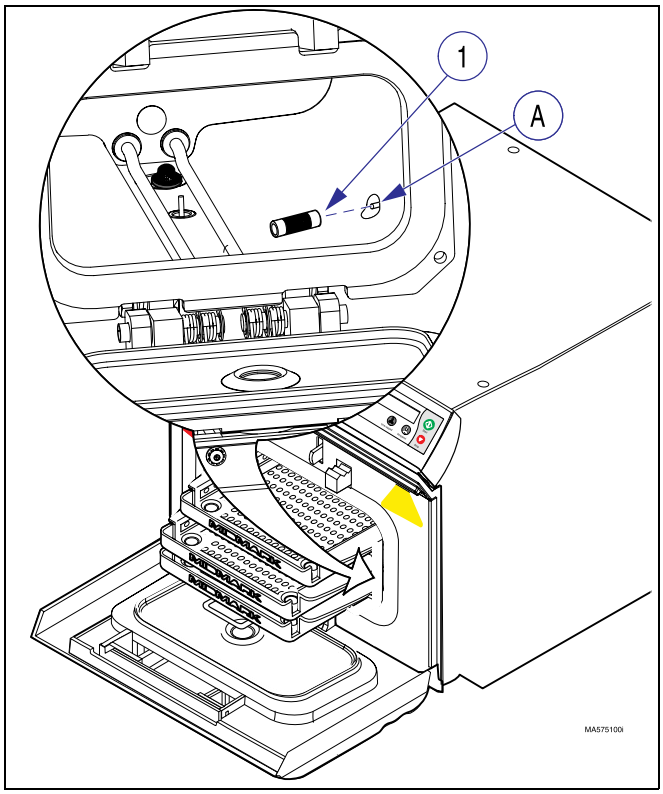

Figure 4-7. Filter Screen

(4) The filter may be cleaned with mild soap and distilled water. A small stiff bristled brush or ultrasonic cleaner may be helpful to remove foreign objects from the filter surface. Rinse the filter with distilled water.

B. Installation

(1) Push filter screen (1, Figure 4-7) into temp sensor cavity (A) as far as it will go.

(2) Install tray rack and trays (Refer to para 4.6).

(3) Close sterilizer door.

© Midmark Corporation 1999 SF-1597

Printed in U.S.A.

4.9 Chamber Mesh Filter

A. Removal

(1) Open sterilizer door.

(2) Remove tray rack and trays (Refer to para 4.6).

(3) Using care not to damage filter, grasp filter (1, Figure 4-8) and gently pull upwards while twisting slightly (a pair of pliers or screwdriver may be used if filter is stuck).

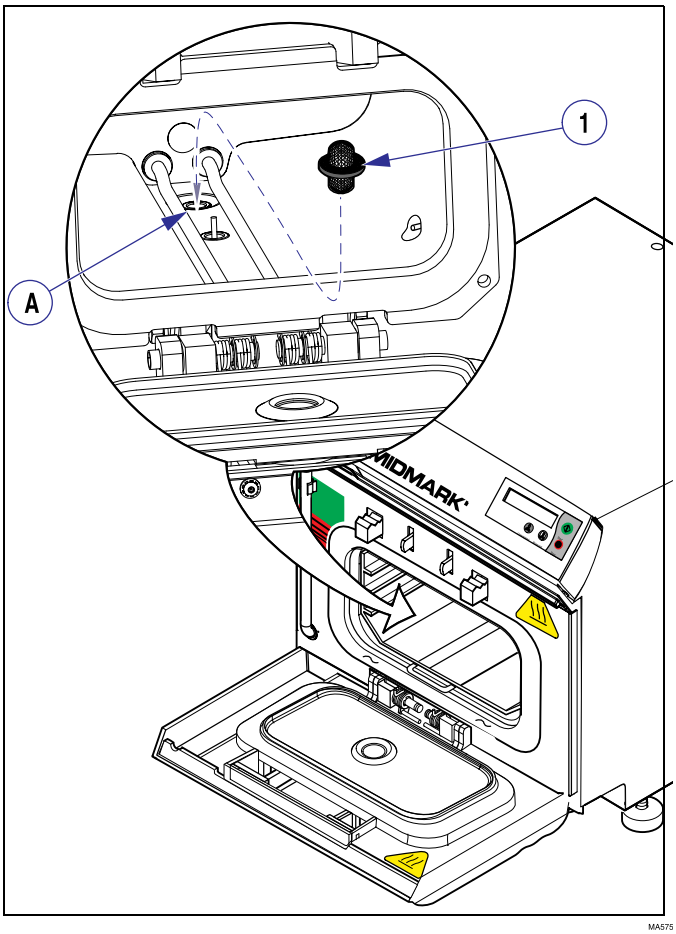

Figure 4-8. Chamber Mesh Filter

(4) The filter may be cleaned with mild soap and distilled or demineralized water. A small stiff bristled brush or ultrasonic cleaner may be helpful to remove foreign objects from the filter surface. Rinse the filter with distilled or demineralized water.

B. Installation

(1) Install the filter (1, Figure 4-8) by inserting the filter into the hole (A) in the chamber bottom and pressing downwards while twisting slightly.

(2) Install tray rack and trays (Refer to para 4.6).

(3) Close sterilizer door.

4.10 Door Gasket

A. Removal

WARNING
Allow unit to cool. Failure to comply could result in personal injury due to burns.

(1) Open sterilizer door.

(2) Remove door gasket (1, Figure 4-9) from door plate (2).

NOTE
With door gasket removed, check operation of door interlock plunger weldment to assure it operates freely when depressed.

(3) Depress door interlock plunger (3). If it does not operate freely and spring back it may need to be cleaned and lubricated (Refer to Para 4.11).

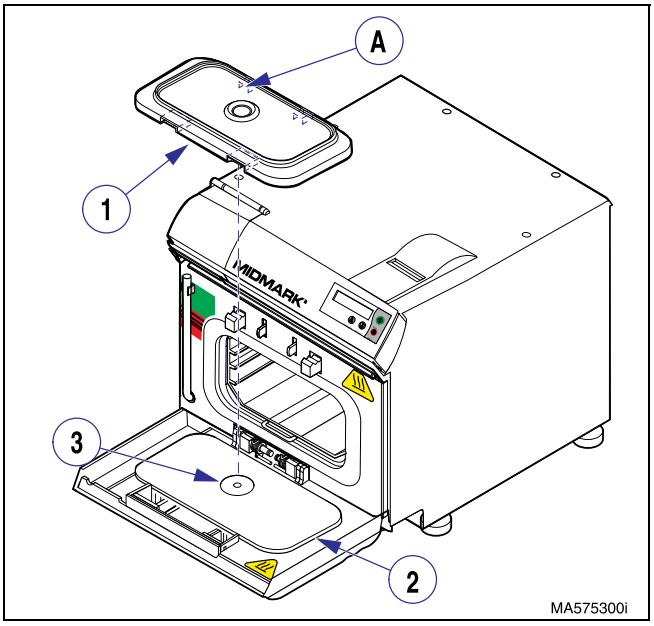

Figure 4-9. Door Gasket

B. Installation

EQUIPMENT ALERT
Clean the new door gasket with a mild solution of soap and water, then rinse with distilled water before installing.

(1) Clean the new door gasket (1, Figure 4-9).

(2) Install door gasket (1) on door plate (2), making sure two smaller cutouts (A) on inner lip of door gasket are positioned toward the hinge (bottom side) of door.

(3) Operate sterilizer and check for leaks.

4.11 Door Interlock Plunger

A. Removal

WARNING
Allow unit to cool. Failure to comply could result in personal injury due to burns.

(1) Open door and remove door gasket (Refer to Para 4.10).

(2) Remove two screws (1, Figure 4-10) and door handle (2) from handle bracket (3).

NOTE
In the following step, screw (6) cannot be accessed by a screwdriver and cannot be removed. There is a slotted hole (A) for screw head so door cover can be removed.

(3) Remove three screws (4) from door cover (5).

(4) Slide door cover (5) to right and then down to free screw (6) from slotted hole (A). Pull outward to remove door cover from inside door cover (7).

(5) Push in on door interlock plunger (8) and remove E-clip (9).

(6) Remove door interlock plunger (8) and compression spring (10) from door plate (11).

B. Installation

EQUIPMENT ALERT
Door interlock plunger must be cleaned and then lubricated before installing on door. Use a high temperature (500 °F [260 °C]) lubricant.

(1) Clean and lubricate door interlock plunger (8, Figure 4-10).

(2) Install compression spring (10) on door interlock plunger (8) and then install assembled door interlock plunger in door plate (11).

(3) While pushing in on door interlock plunger (8), install e-clip (9).

(4) Position door cover (5) on inside door cover (7). Slide to left until screw (6) is locked in slotted hole (A).

(5) Secure door cover (5) to inside door cover (7) with three screws (4).

EQUIPMENT ALERT
Do not overtighten the mounting screws (1) when installing the door handle (2) or the handle could deform.

(6) Install door handle (2) on handle bracket (3) and secure with two screws (1).

(7) Clean and install door gasket (refer to Para 4.10).

(8) Run a cycle and check operation.

© Midmark Corporation 1999 SF-1597

Printed in U.S.A.

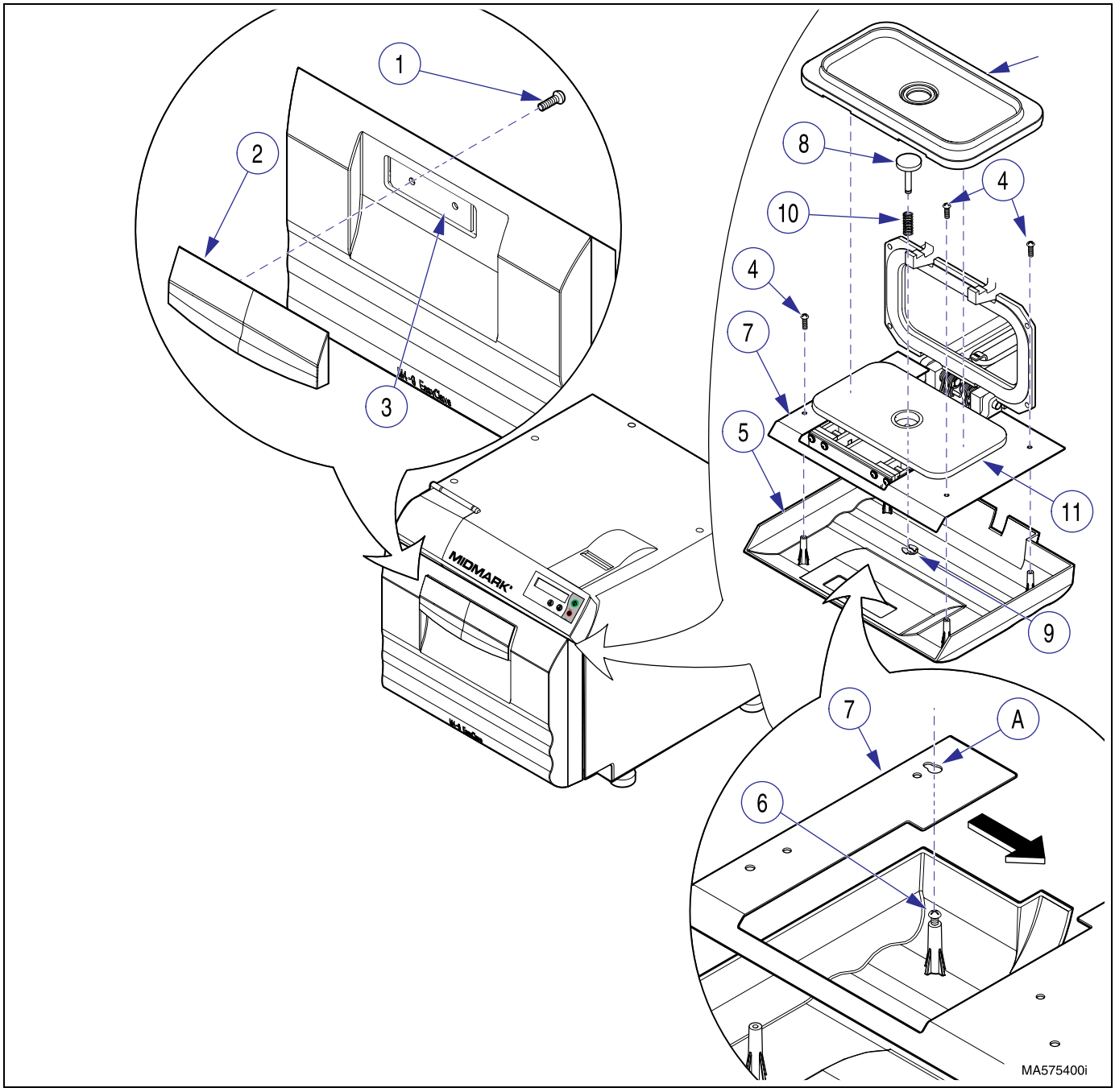

Figure 4-10. Door Interlock

4.12 Main Fuse Replacement

A. Fuse Replacement

WARNING
Always disconnect power cord from outlet receptacle before removing any sterilizer covers/panels or making any repairs to prevent possibility of electrical shock and allow unit to cool. Failure to comply could result in personal injury.

(1) Unplug sterilizer power cord from outlet receptacle.

NOTE
Main fuse for Sterilizer is located on back panel.

(2) Unscrew fuse cap (1, Figure 4-11) from fuse body (2).

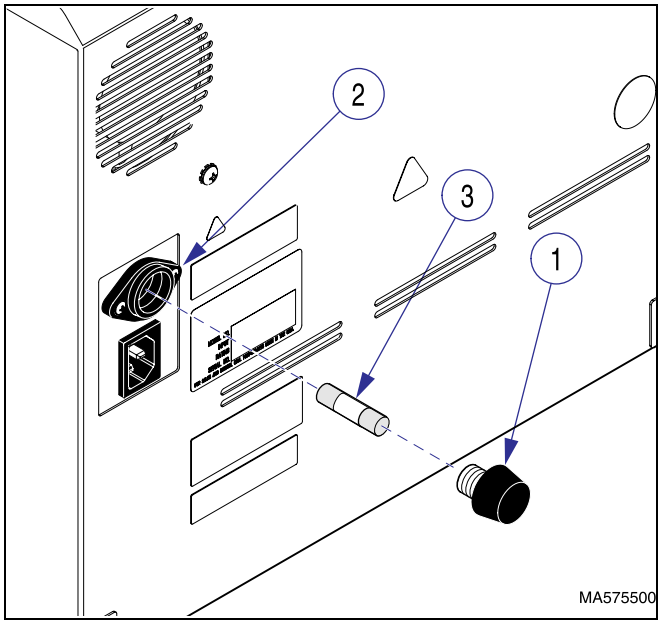

Figure 4-11. Fuse Replacement

(3) Remove fuse (3) from fuse cap (1).

(4) Perform continuity check on fuse. Also, inspect fuse for obvious damage such as blackened areas, melting, etc.

EQUIPMENT ALERT
Use only factory replacement fuse or fuse of same specifications and assure electrical supply outlet for sterilizer is an ample, dedicated circuit.

(5) Install new fuse (3) in fuse cap (1).

(6) Screw fuse cap (1) into fuse body (2).

(7) Plug sterilizer power cord into outlet receptacle.

4.13 Fuse Body

A. Removal

WARNING
Always disconnect power cord from outlet receptacle before removing any sterilizer covers/panels or making any repairs to prevent possibility of electrical shock and allow unit to cool. Failure to comply could result in personal injury.

(1) Unplug sterilizer power cord from outlet receptacle.

(2) Remove R.H. side panel (Refer to para 4.2).

(3) Unscrew fuse cap (1, Figure 4-12) from fuse body (2).

(4) Remove fuse (3) from fuse cap (1).

(5) Disconnect two wire harnesses (4) from terminals of fuse body (2).

(6) Remove two screws (5), locknuts (6), and fuse body (2) from power bracket assembly (7).

B. Installation

(1) Install fuse body (2, Figure 4-12) on power bracket assembly (7) and secure with two locknuts (6) and screws (5).

(2) Connect two wire harnesses (4) to two terminals on fuse body (2).

© Midmark Corporation 1999 SF-1597

Printed in U.S.A.

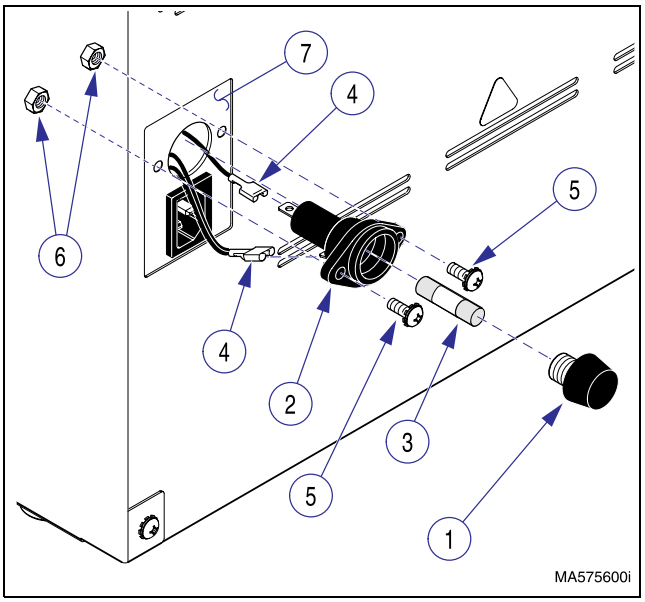

Figure 4-12. Fuse Body

(3) Install fuse (3) in fuse cap (1).

(4) Screw fuse cap (1) into fuse body (2).

(5) Install R.H. side panel (Refer to para 4.2).

(6) Plug sterilizer power cord into outlet receptacle.

4.14 Axial Flow Fan

A. Removal

WARNING
<u>Always</u> disconnect power cord from outlet receptacle before removing any sterilizer covers/panels or making any repairs to prevent possibility of electrical shock. Allow unit to cool and drain unit to prevent spillage during repairs. Failure to comply could result in personal injury.

(1) Unplug power cord from outlet receptacle.

(2) Remove side and back panels (Refer to para 4.2).

(3) Tag and disconnect two wires (1, Figure 4-13) from terminals of axial flow fan (2).

(4) Remove four locknuts (3), screws (4), and axial flow fan (2) from power bracket assembly (5).

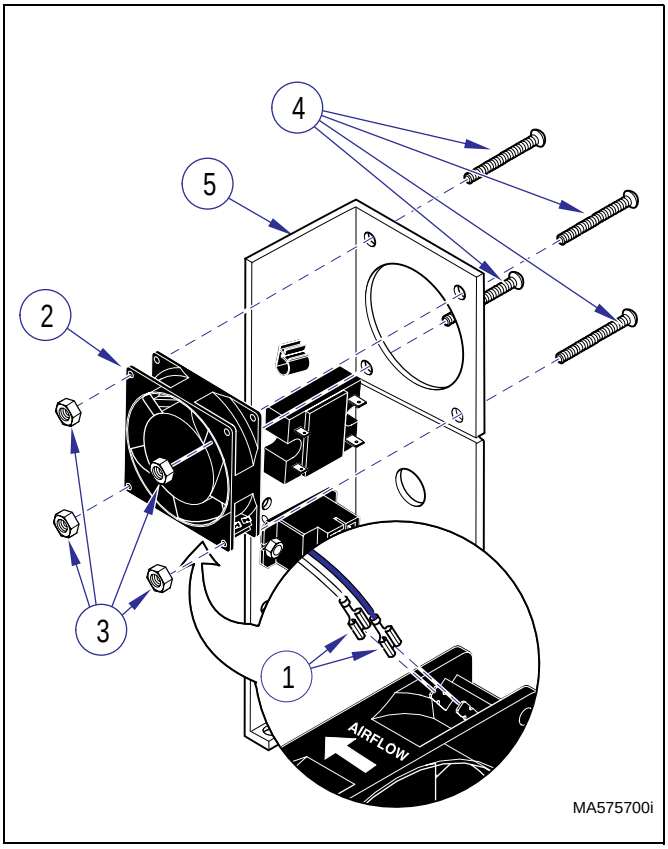

Figure 4-13. Axial Flow Fan

B. Installation

EQUIPMENT ALERT
Flow arrow on bottom of fan body must be pointed *<u>toward</u>* main control p.c. board when axial flow fan is installed.

(1) Install axial flow fan (2, Figure 4-13) on power bracket assembly (5) and secure with four screws (4) and locknuts (3) making sure flow arrow (A) is pointing toward main control p.c. board.

(2) Connect two wires (1) to terminals of axial flow fan (2).

EQUIPMENT ALERT
Check fan intake openings; make sure intake is clear of any debris that would restrict air flow.

(3) Install side and back panels (Refer to para 4.2).

(4) Plug power cord into outlet receptacle.

© Midmark Corporation 1999 SF-1597

Printed in U.S.A.

4.15 Solid State Relay

A. Removal

WARNING
Always disconnect power cord from outlet receptacle before removing any sterilizer covers/panels or making any repairs to prevent possibility of electrical shock. Allow unit to cool and drain unit to prevent spillage during repairs. Failure to comply could result in personal injury.

(1) Unplug power cord from outlet receptacle.

(2) Remove side and back panels (Refer to para 4.2).

(3) Remove two locknuts (1, Figure 4-14) and then lift power bracket assembly (2) off of two studs (3) and turn slightly so that two screws (4) can be accessed.

(4) Tag and disconnect four wires (5) from terminals of solid state relay (6).

(5) Remove two screws (4), locknuts (7), and solid state relay (6) from power bracket assembly (2).

B. Installation

(1) Apply thermal joint compound, to dissipate heat, to rear mating surface of solid state relay (6, Figure 4-14). Refer to Table 1-3, Special Tool List, for thermal joint compound.

NOTE
Install solid state relay so terminals 3 and 4 face toward main control p.c. board.

(2) Install solid state relay (6) on power bracket assembly (2) and secure with two screws (4) and locknuts (7).

(3) Connect four wires (5) to terminals of solid state relay (6). If necessary, refer to Figure 5-4, wiring diagram to make wiring connections.

(4) Install power bracket assembly (2) on two studs (3) and secure in place with two locknuts (1).

(5) Install side and back panels (Refer to para 4.2).

(6) Plug power cord into outlet receptacle.

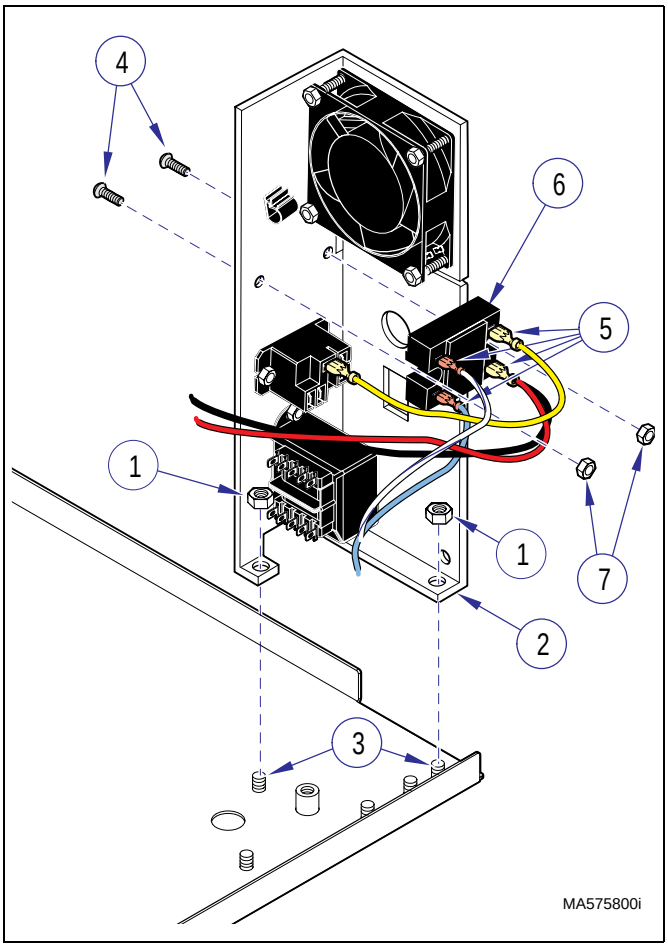

Figure 4-14. Solid State Relay

4.16 Main Relay

A. Removal

WARNING
Always disconnect power cord from outlet receptacle before removing any sterilizer covers/panels or making any repairs to prevent possibility of electrical shock. Allow unit to cool and drain unit to prevent spillage during repairs. Failure to comply could result in personal injury.

(1) Unplug power cord from outlet receptacle.

(2) Remove side and back panels (Refer to para 4.2).

(3) Remove two locknuts (1, Figure 4-15) and then lift power bracket assembly (2) off of two studs (3) and turn slightly so that two screws (4) can be accessed.

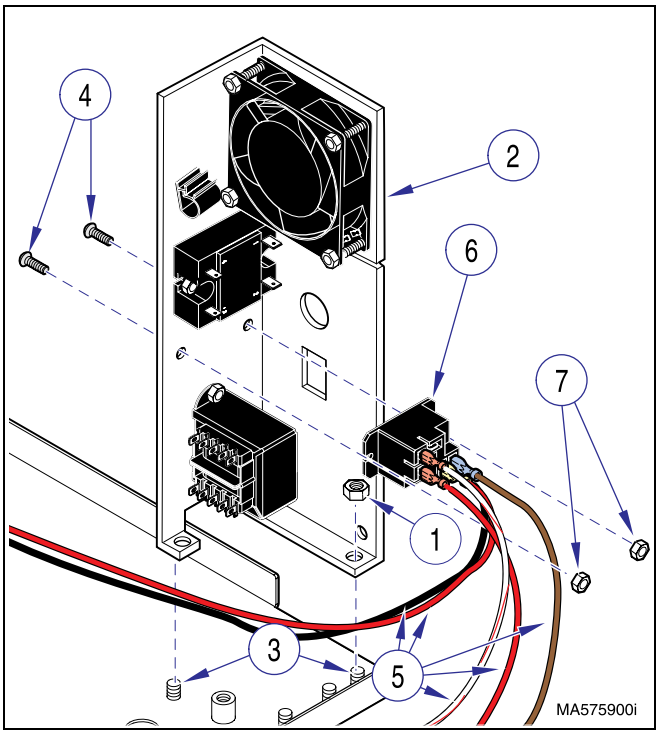

Figure 4-15. Main Relay

(4) Tag and disconnect five wires (5) from terminals of main relay (6).

(5) Remove two screws (4), locknuts (7), and main relay (6) from power bracket assembly (2).

B. Installation

(1) Install main relay (6, Figure 4-15) on power bracket assembly (2) and secure with two screws (4) and locknuts (7).

(2) Connect five wires (5) to terminals of main relay (6). If necessary, refer to Figure 5-4, wiring diagram to make wiring connections.

(3) Install power bracket assembly (2) on two studs (3) and secure in place with two locknuts (1).

(4) Install side and back panels (Refer to para 4.2).

(5) Plug power cord into outlet receptacle.

4.17 Transformer

A. Removal

WARNING
<u>Always</u> disconnect power cord from outlet receptacle before removing any sterilizer covers/panels or making any repairs to prevent possibility of electrical shock. Allow unit to cool and drain unit to prevent spillage during repairs. Failure to comply could result in personal injury.

(1) Unplug power cord from outlet receptacle.

(2) Remove side and back panels (Refer to para 4.2).

(3) Remove two locknuts (1, Figure 4-16) and then lift power bracket assembly (2) off of two studs (3) and turn slightly so that two screws (4) can be accessed.

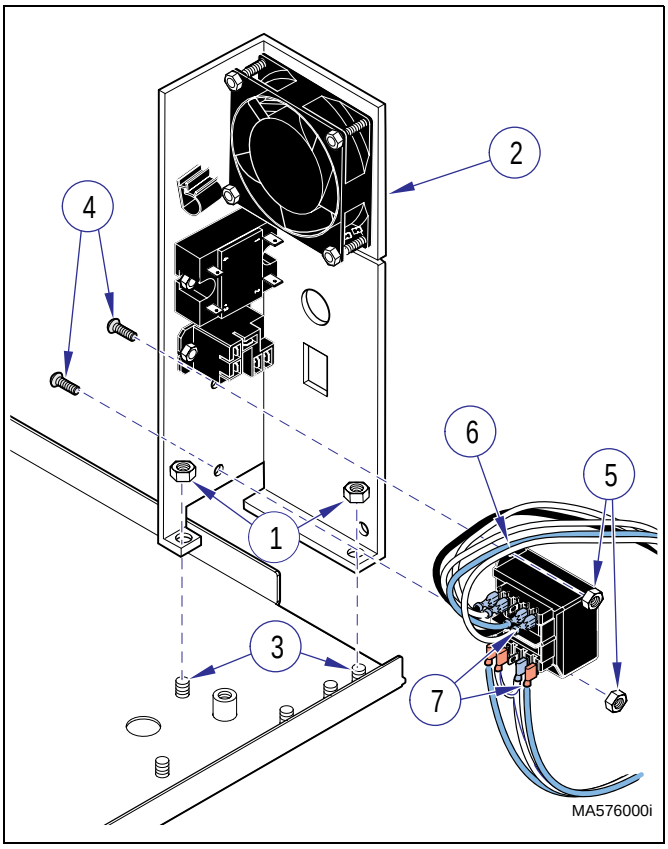

Figure 4-16. Transformer

(4) Remove two screws (4) and nuts (5) that secure transformer (6) to power bracket assembly (2).

(5) Carefully pull transformer (6) outward slightly and then rotate so wires (7) can be accessed.

(6) Tag and disconnect eight wires (7) from terminals of transformer (6).

B. Installation

(1) Connect eight wires (7, Figure 4-16) to terminals of transformer (6). If necessary, refer to Figure 5-4, wiring diagram to make wiring connections.

(2) Position transformer (6) on power bracket assembly (2) and secure with two screws (4) and nuts (5).

(3) Install power bracket assembly (2) on two studs (3) and secure with two locknuts (1).

(4) Install side and back panels (Refer to para 4.2).

(5) Plug power cord into outlet receptacle.

4.18 Pressure Transducer

A. Removal

WARNING
<u>Always</u> disconnect power cord from outlet receptacle before removing any sterilizer covers/panels or making any repairs to prevent possibility of electrical shock. Allow unit to cool and drain unit to prevent spillage during repairs. Failure to comply could result in personal injury.

(1) Unplug power cord from outlet receptacle.

(2) Remove R.H. side panel (Refer to para 4.2).

(3) Refer to para 2.3 and ***record*** old pressure transducer calibration data.

(4) Disconnect transducer connector (1, Figure 4-17) from connector J14 (2) on main control p.c. board.

(5) Cut wire tie (3) that secures pressure transducer (4) to mounting bracket of main control p.c. board.

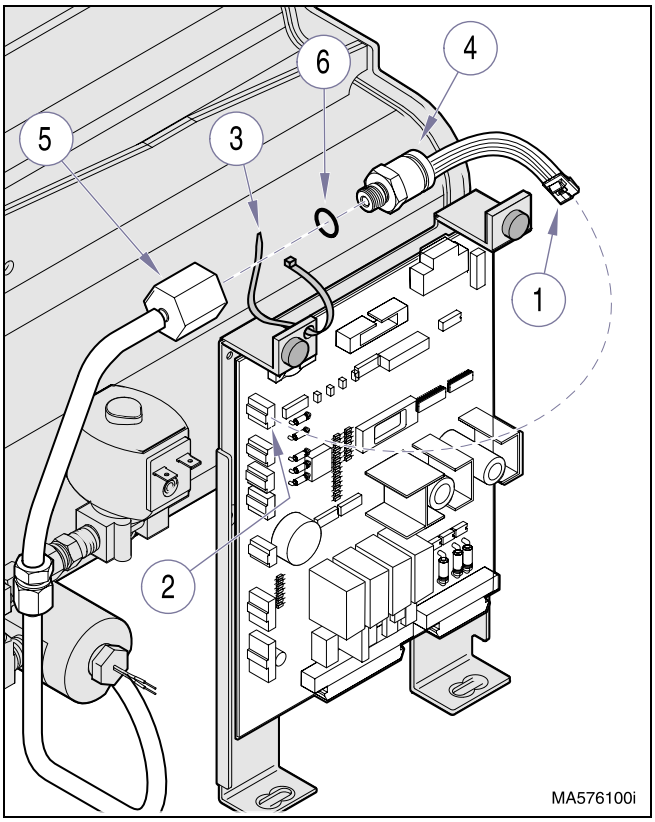

Figure 4-17. Pressure Transducer

(6) Using 3/4 in. wrench, remove pressure transducer (4) from transducer fitting (5).

B. Installation

(1) Make sure o-ring (6, Figure 4-17) is present on threaded portion of pressure transducer (4).

(2) Using 3/4 in. wrench, install pressure transducer (4) on transducer fitting (5) and secure to mounting bracket with wire tie (3).

(3) Connect transducer connector (1) to connector J14 (2) on main control p.c. board.

CAUTION
The unit **<u>must be calibrated</u>** with the data supplied with the new pressure transducer. Failure to do so will result in unsuccessful sterilization cycles (excessive error coding).

(4) Enter calibration data for new pressure transducer into main p.c. board memory (Refer to para 2.3).

© Midmark Corporation 1999 SF-1597

Printed in U.S.A.

WARNING
With the side panel off while running a cycle, use care to prevent burning self on hot fittings, tubing and components. Do not touch exposed electrical components or terminals. Serious personal injury due to electrical shock could occur.

(5) Plug unit into electrical outlet and run a cycle; then check for leaks.

(6) Install R.H. side panel (Refer to para 4.2).

(7) Plug power cord into outlet receptacle.

4.19 Steam Temperature Probe

A. Removal

WARNING
Always disconnect power cord from outlet receptacle before removing any sterilizer covers/panels or making any repairs to prevent possibility of electrical shock. Allow unit to cool and drain unit to prevent spillage during repairs. Failure to comply could result in personal injury.

(1) Unplug power cord from outlet receptacle.

(2) Remove R.H. side panel (Refer to para 4.2).

(3) Refer to para 2.3 and ***record*** old temperature probe calibration data.

(4) Disconnect temperature probe harness (1, Figure 4-18) from connector J5 (2) on main p.c. board.

(5) Using a wrench, remove temperature probe assembly (3) from sensor fitting (4).

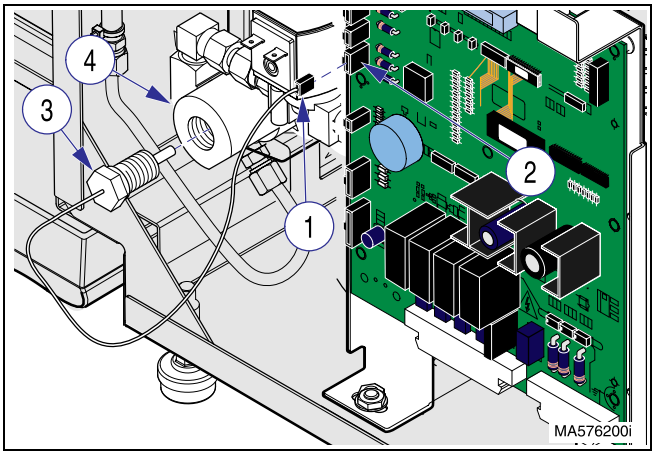

Figure 4-18. Steam Temperature Probe

B. Installation

EQUIPMENT ALERT
Use a pipe thread compound on the sterilizer fittings capable of withstanding the operating pressures and temperatures. Do *not* use a teflon tape as particles may migrate through system and cause blockage.

(1) Coat threads of temperature probe assembly (3, Figure 4-18) with high temperature pipe thread compound (Loctite 565).

(2) Install temperature probe assembly (3) into sensor fitting (4) on chamber assembly.

(3) Connect temperature probe harness (1) to connector J5 (2) on main p.c. board.

CAUTION
The unit must be calibrated with the data supplied with the new temperature probe. Failure to do so will result in unsuccessful sterilization cycles (excessive error coding).

(4) Enter calibration data for ***new*** temperature probe into main p.c. board memory (Refer to para 2.3).

WARNING
With the side panel off while running a cycle, use care to prevent burning self on hot fittings, tubing and components. Do not touch exposed electrical components or terminals. Serious personal injury due to electrical shock could occur.

© Midmark Corporation 1999 SF-1597

Printed in U.S.A.

(5) Run a cycle, to place pressure on fittings, then check for leaks.

(6) Install R.H. side panel (Refer to para 4.2).

(7) Plug power cord into outlet receptacle.

4.20 Door Latch Interlock Switch

A. Removal

WARNING
Always disconnect power cord from outlet receptacle before removing any sterilizer covers/panels or making any repairs to prevent possibility of electrical shock. Allow unit to cool and drain unit to prevent spillage during repairs. Failure to comply could result in personal injury.

(1) Unplug power cord from outlet receptacle.

(2) Remove R.H. side panel (Refer to para 4.2).

(3) If necessary, remove top cover (Refer to para 4.3).

(4) Tag and disconnect two wires (1, Figure 4-19) from terminals of interlock switch (2).

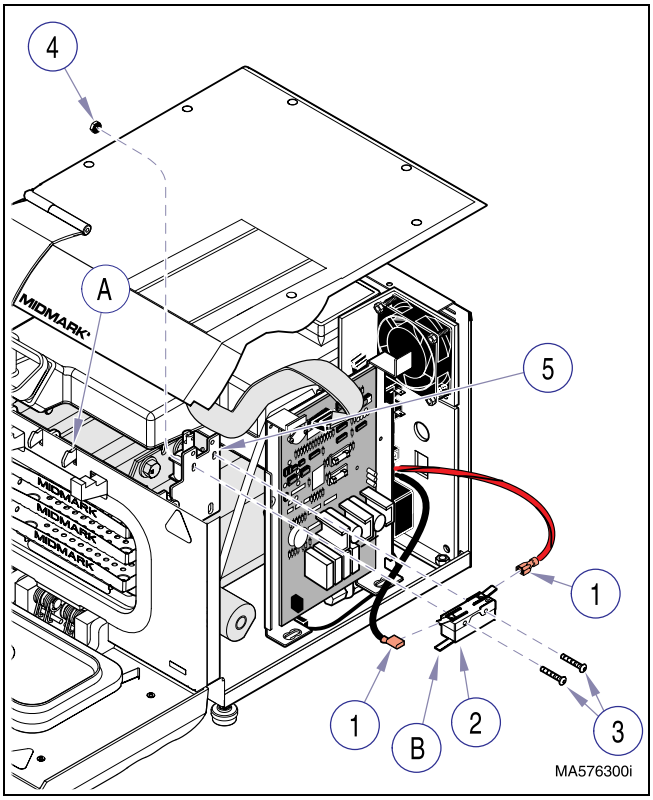

Figure 4-19. Door Latch Interlock Switch

(5) Remove two screws (3), locknut (4), and interlock switch (2) from open door bracket (5).

B. Installation / Adjustment

NOTE
If adjusting interlock switch only, loosen two screws (3, Figure 4-19) and go to step (2).

(1) Install interlock switch (2, Figure 4-19) on open door bracket (5) and secure with two screws (3) and locknut (4). Do not tighten screws and locknut at this time.

EQUIPMENT ALERT
The adjustment of the Door Latch Interlock Switch is **critical for proper operation** of Sterilizer. Do **not** deviate from the Adjustment procedures. Failure to comply may result in improper operation.

NOTE
To adjust the switch setting you **must** have a straight edge that does not flex and is no less than 1" (2.54 cm) wide. A 12" (30.5 cm) rule from a combination square works well. Also needed are two vise grips and a VOM or continuity light.

(2) Attach the leads from the continuity light or VOM to the terminals (A, Figure 4-20) of the interlock switch (1). The VOM must be set to read continuity.

EQUIPMENT ALERT
The straight edge (2) must be level when secured to the latch brackets (3) and depressing the door lift brackets (4).

(3) Place the straight edge (2) across the top of both latch brackets (3) so that it depresses the two door lift brackets (4) and secure it with two vise grips (5).

(4) Adjust, by moving interlock switch (1) from its OPEN position (shows no continuity) until trip lever (B) just closes the contacts (shows continuity).

(5) Holding the switch (1) to prevent movement, tighten the mounting screws and install the wire leads.

© Midmark Corporation 1999 SF-1597

Printed in U.S.A.

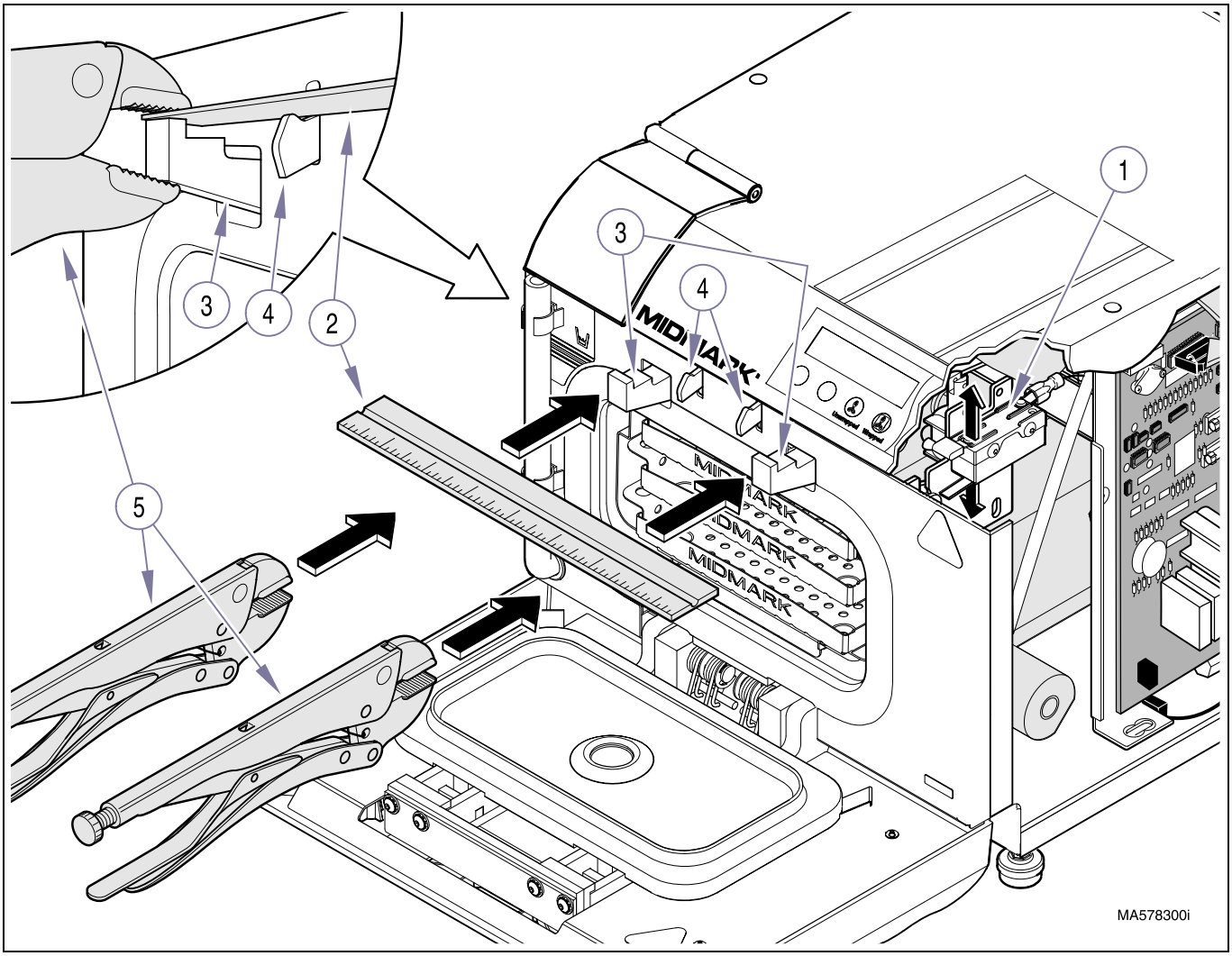

Figure 4-20. Door Latch Interlock Switch

(6) Remove the straight edge (2).

WARNING
Use extreme caution when unit is plugged into outlet to prevent possibility of personal injury from electrical shock.

(7) Plug power cord into outlet receptacle.

(8) Run Service Diagnostics to check operation of door interlock switch (2) (refer to Service Diagnostics [Door Open Test], Para 2.2).

(9) Install R.H. side panel (Refer to para 4.2).

(10) Run a Sterilization Cycle and check operation.

© Midmark Corporation 1999 SF-1597

Printed in U.S.A.

4.21 Door Pulse Solenoid

A. Removal

WARNING
Always disconnect power cord from outlet receptacle before removing any sterilizer covers/panels or making any repairs to prevent possibility of electrical shock. Allow unit to cool and drain unit to prevent spillage during repairs. Failure to comply could result in personal injury.

(1) Unplug power cord from outlet receptacle.

(2) Remove R.H. side panel (Refer to para 4.2).

(3) Tag and disconnect two wires (1, Figure 4-21) from terminals of pulse solenoid (2).

(4) Remove two screws (3) and pulse solenoid (2) from open door bracket (4).

NOTE
Perform steps 5 thru 7 only if plunger (5) must be replaced.

(5) Remove top cover (Refer to para 4.3).

(6) Remove two e-rings (6) and bushings (7) from ends of latch pivot weldment (8); then remove latch pivot weldment from open door bracket (4).

(7) Using a 3/32 in. pin punch, drive out roll pin (9) and remove plunger (5) from latch pivot weldment (8).

B. Installation

NOTE
Perform steps 1 thru 4 only if plunger (5, Figure 4-21) is being replaced.

(1) Using a 3/32 in. pin punch, install plunger (5, Figure 4-21) on latch pivot weldment (8) and secure with roll pin (9).

(2) Position latch pivot weldment (8) on open door bracket (4); then gently tap bushings (7) into place using a hammer and punch.

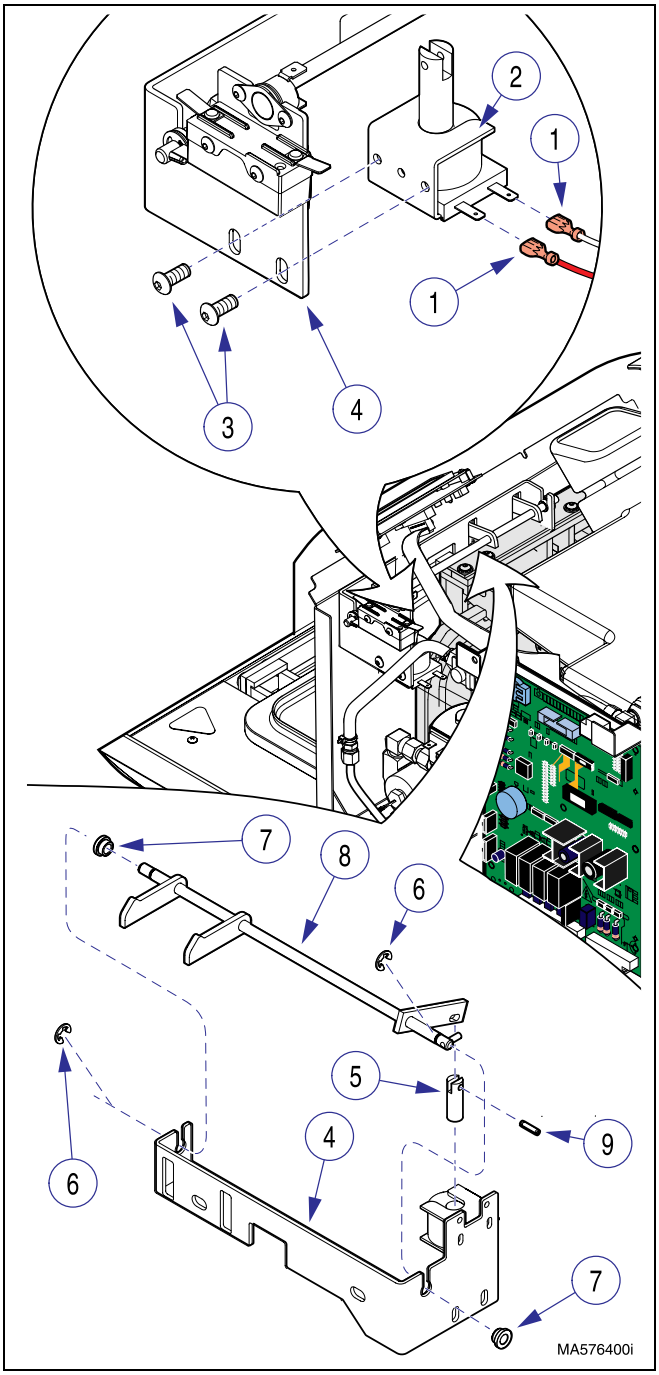

Figure 4-21. Door Pulse Solenoid

(3) Install two e-rings (6); one on each end of latch pivot weldment (8).

(4) Install top cover (Refer to para 4.3).

NOTE
When installing pulse solenoid, center two screws (3) in elongated screw holes in open door bracket (4).

© Midmark Corporation 1999 SF-1597

Printed in U.S.A.

(5) Install pulse solenoid (2) on open door bracket (4) and secure with two screws (3), making sure to insert plunger (5) in pulse solenoid.

(6) Connect two wires (1) to terminals of pulse solenoid (2). If necessary, refer to Section 5, Schematics and Diagrams, to make wiring connections.

(7) Install R.H. side panel (Refer to para 4.2).

(8) Plug power cord into outlet receptacle.

(9) Run Service Diagnostics to check operation of door interlock switch (refer to Service Diagnostics [Door Open Test], Para 2.2).

4.22 Main Control P.C. Board

A. Removal

CAUTION
Main control p.c. board must be calibrated with pressure transducer and temperature probe data Failure to do so will result in unsuccessful sterilization cycles (excessive error coding).

(1) Refer to para 2.3 and ***record*** temperature probe and pressure transducer calibration data. If this is not possible, use data supplied with components.

WARNING
<u>Always</u> disconnect power cord from outlet receptacle before removing any sterilizer covers/panels or making any repairs to prevent possibility of electrical shock. Allow unit to cool and drain unit to prevent spillage during repairs. Failure to comply could result in personal injury.

(2) Unplug power cord from outlet receptacle.

(3) Remove R.H. side panel (Refer to para 4.2).

(4) Tag and disconnect ten wire harnesses (1, Figure 4-22) from main control p.c board (2).

(5) Remove six screws (3), locknuts (4), and main control p.c. board (2) from PC board bracket (5).

B. Installation

(1) Install main p.c. board (2, Figure 4-22) on PC board bracket (5) and secure with six screws (3) and locknuts (4).

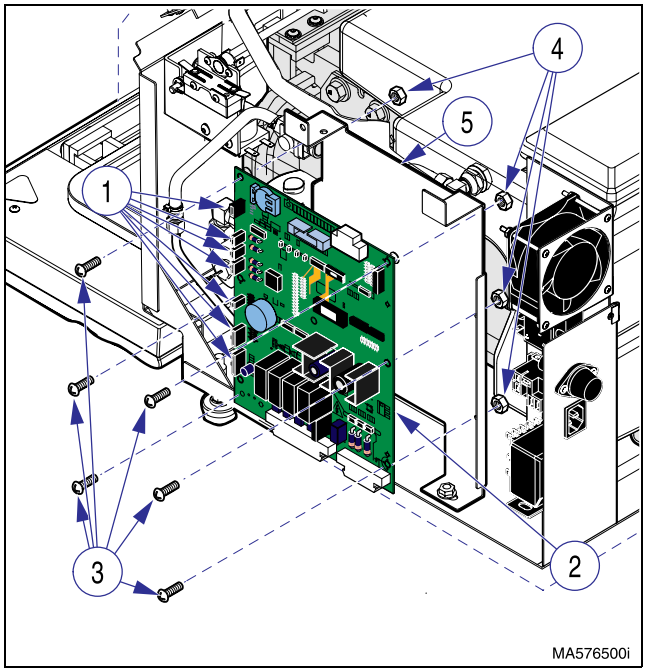

Figure 4-22. Main P.C. Board

(2) Connect ten wire harnesses (1) to main control p.c. board (2).

(3) Enter calibration data for temperature probe and pressure transducer into main control p.c. board memory (Refer to para 2.3).

(4) Plug unit into an electrical outlet and run Service Diagnostics to check operation of various components (refer to Service Diagnostics, Para 2.2).

(5) Install R.H. side panel (Refer to para 4.2).

(6) Plug power cord into outlet receptacle.

© Midmark Corporation 1999 SF-1597

Printed in U.S.A.

4.23 Fan Thermostat

A. Removal

WARNING
Always disconnect power cord from outlet receptacle before removing any sterilizer covers/panels or making any repairs to prevent possibility of electrical shock. Allow unit to cool and drain unit to prevent spillage during repairs. Failure to comply could result in personal injury.

(1) Unplug power cord from outlet receptacle.

(2) Remove R.H. side panel (Refer to para 4.2).

(3) If necessary, remove top cover (Refer to para 4.3).

(4) Remove two screws (1, Figure 4-23), and fan thermostat (2) from open door bracket (3).

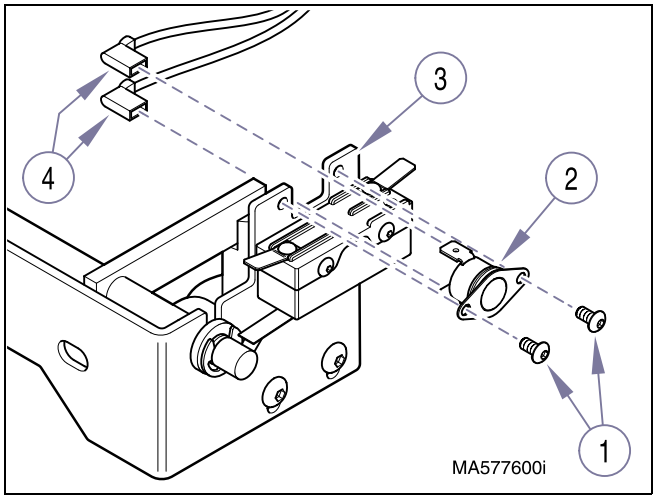

Figure 4-23. Fan Thermostat

(5) Disconnect two wires (4) from terminals of fan thermostat (2).

B. Installation

(1) Connect two wires (4, Figure 4-23) to terminals of fan thermostat (2).

(2) Install fan thermostat (2) on open door bracket (3) and secure with two screws (1).

(3) If removed, install top cover (Refer to para 4.3).

(4) Install R.H. side panel (Refer to para 4.2).

(5) Plug power cord into outlet receptacle.

4.24 Air Solenoid Valve

A. Removal

WARNING
Always disconnect power cord from outlet receptacle before removing any sterilizer covers/panels or making any repairs to prevent possibility of electrical shock. Allow unit to cool and drain unit to prevent spillage during repairs. Failure to comply could result in personal injury.

(1) Unplug power cord from outlet receptacle.

(2) Remove R.H. side panel (Refer to para 4.2).

(3) Remove two locknuts (1, Figure 4-24) from two studs (2); raise up PC board bracket (3) and position it out of the way.

(4) Tag and disconnect two wires (4) from terminals of air solenoid valve (5).

(5) Loosen two compression nuts (6) and then remove air solenoid valve (5) from unit.

(6) Remove male fitting (7) and elbow (8) from air solenoid valve (5).

B. Installation

EQUIPMENT ALERT
Use a pipe thread compound on the sterilizer fittings capable of withstanding the operating pressures and temperatures. Do *not* use a teflon tape as particles may migrate through system and cause blockage.

(1) Coat threads of male fitting (7, Figure 4-24) and elbow (8) with high temp.hydraulic sealant (Loctite 565).

NOTE
Port “1” of Air Solenoid Valve connects to chamber side and Port “2” connects to reservoir side.

© Midmark Corporation 1999 SF-1597

Printed in U.S.A.

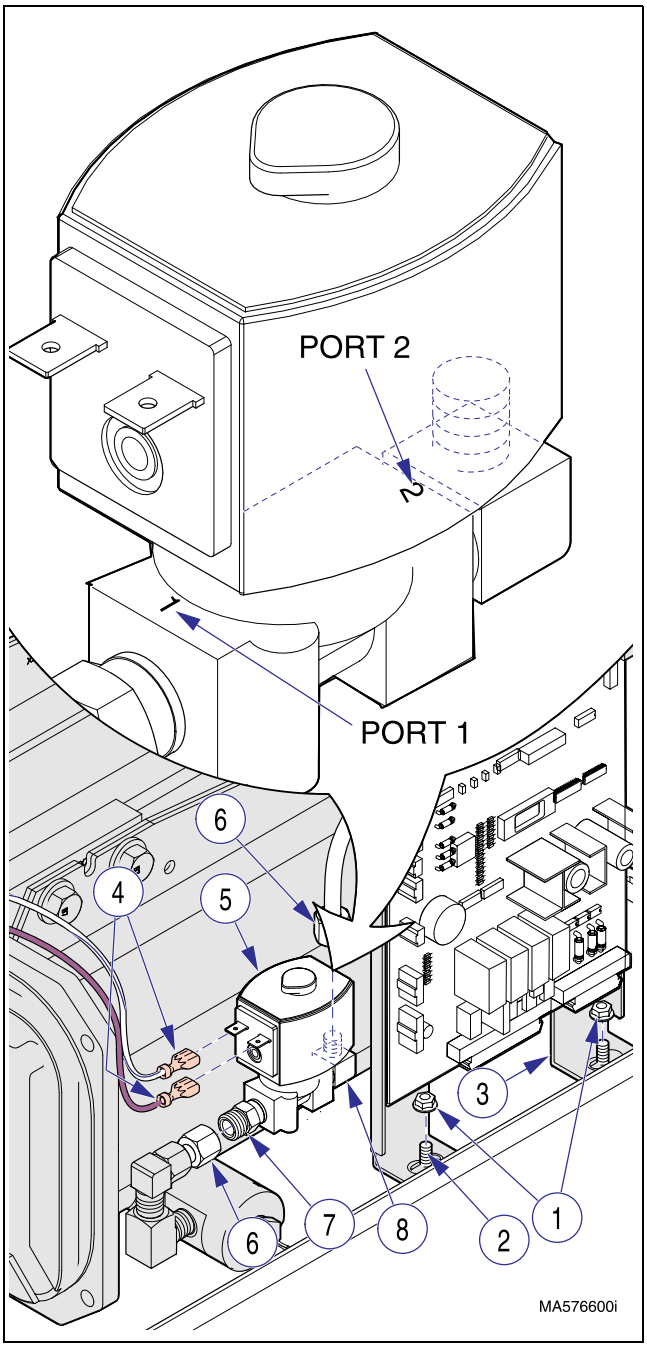

Figure 4-24. Air Solenoid Valve

(2) Install male fitting (7) in port “1” and elbow (8) in port “2” of air solenoid valve (5).

(3) Install air solenoid valve (5) securing with two compression nuts (6).

(4) Connect two wires (4) to terminals of air solenoid valve (5).

(5) Position PC board bracket (3) on two studs (2) and secure with two locknuts (1).

WARNING
With the side panel off while running a cycle, use care to prevent burning self on hot fittings, tubing and components. Do not touch exposed electrical components or terminals. Serious personal injury due to electrical shock could occur.

(6) Run Service Diagnostics to check operation of Air Solenoid Valve (refer to Service Diagnostics [Air Valve Test], Para 2.2).

(7) Plug unit in, run a cycle to place pressure on lines and fittings, then check for leaks.

(8) Install R.H. side panel (Refer to para 4.2).

(9) Plug power cord into outlet receptacle.

4.25 Pressure Relief Valve Test

WARNING
Refer to Operator Manual or Section II, Testing and Troubleshooting, Table 2-1, Normal Operation, for instructions on operating sterilizer. Failure to use proper operating steps could result in personal injury.

(1) Select the UNWRAPPED cycle and press the START button to start the cycle.

(2) Open the water fill cover (1, Figure 4-25).

WARNING
Steam will be vented from bottom, left side of sterilizer when pressure relief valve operates. Place a rolled up towel around bottom of sterilizer before opening pressure relief valve.

(3) When display indicates “STERILIZING”, lift up on pressure relief tab (2) to operate the pressure relief valve (3).

© Midmark Corporation 1999 SF-1597

Printed in U.S.A.

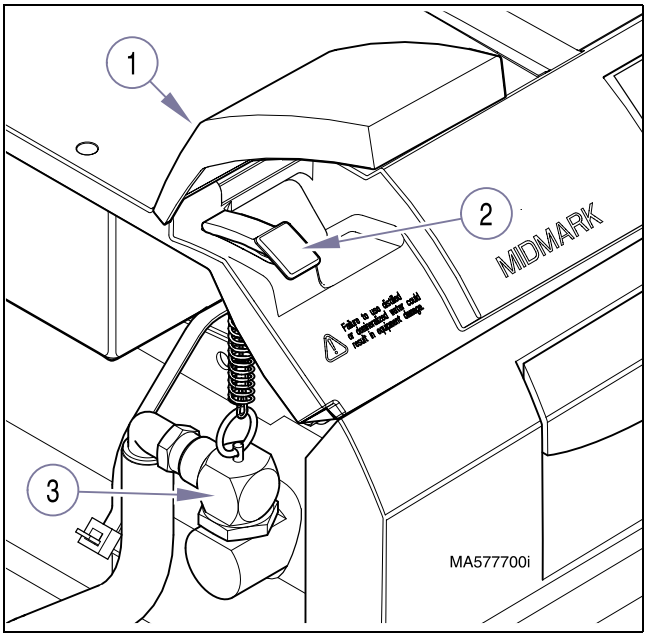

Figure 4-24. Pressure Relief Valve Test

(4) If excessive force was required to open pressure relief valve (3) it must be replaced (Refer to Para 4.26).

NOTE
If the pressure relief valve does not close completely when the pressure relief tab is released, pull the tab up again and release quickly so valve snaps back to position. Do this until valve seats properly.

(5) When released, if the pressure relief valve will not close entirely it must be replaced (refer to Para 4.26).

4.26 Pressure Relief Valve

A. Removal

WARNING
<u>Always</u> disconnect power cord from outlet receptacle before removing any sterilizer covers/panels or making any repairs to prevent possibility of electrical shock. Allow unit to cool and drain unit to prevent spillage during repairs. Failure to comply could result in personal injury.

(1) Unplug power cord from outlet receptacle.

(2) Remove L.H. side panel (Refer to para 4.2).

(3) Open water fill cover (1, Figure 4-26) and lift up on pressure relief tab (2) to remove any pressure in chamber.

(4) Disconnect key ring (A) of lanyard assembly (3) from pressure relief valve (4).

(5) Remove tubing (5) from elbow (6).

(6) Using a 1-1/8 in. open end wrench, loosen pressure relief valve (4) until there is clearance to remove elbow (6); then remove elbow.

(7) Using a 1-1/8 in. open end wrench, remove pressure relief valve (4) from chamber port (7).

B. Installation

EQUIPMENT ALERT
Use a pipe thread compound on the sterilizer fittings capable of withstanding the operating pressures and temperatures. Do *<u>not</u>* use a teflon tape as particles may migrate through system and cause blockage.

NOTE
Pressure relief valve must be position so there is clearance to install elbow before tightening.

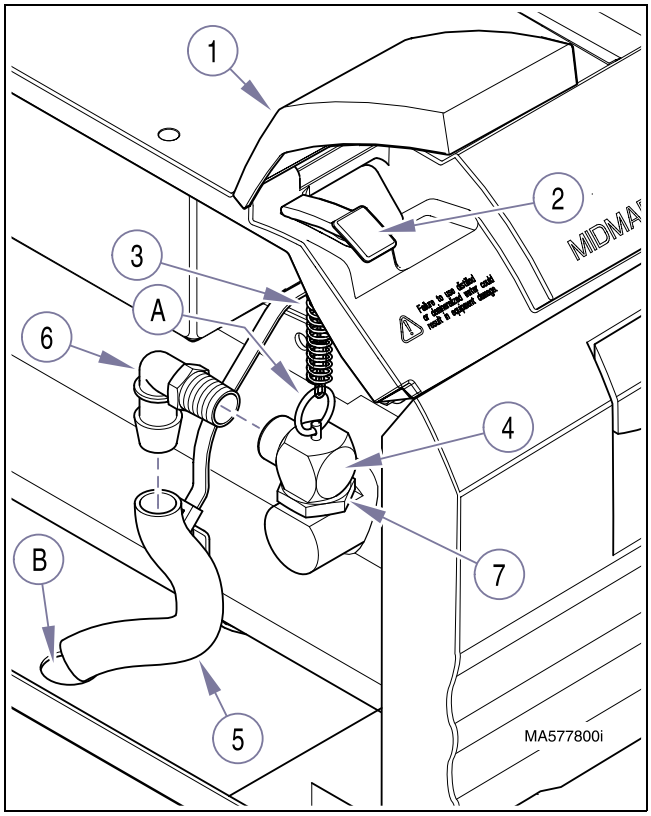

Figure 4-25. Pressure Relief Valve

(1) Coat threads of pressure relief valve (4, Figure 4-26) with high temperature pipe thread compound (Loctite 565).

(2) Using a 1-1/8 in. open end wrench, install pressure relief valve (4, Figure 4-26) on chamber port (7). Tighten pressure relief valve, except for last 1/4 turn.

(3) Install elbow (6) on pressure relief valve (4); then tighten pressure relief valve (4) 1/4 turn (until tubing (5) can be routed without interfering with side panels).

(4) Install tubing (5) on elbow (6) and route tubing through tubing hole (B) in bottom of base.

WARNING

With the side panel off while running a cycle, use care to prevent burning self on hot fittings, tubing and components. Do not touch exposed electrical components or terminals. Serious personal injury due to electrical shock could occur.

(5) Plug unit in, run a cycle to place pressure on lines and fittings, then check for leaks.

(6) Install R.H. side panel (Refer to para 4.2).

(7) Plug power cord into outlet receptacle.

4.27 Vent or Fill Solenoid Valve

A. Removal

WARNING

Always disconnect power cord from outlet receptacle before removing any sterilizer covers/panels or making any repairs to prevent possibility of electrical shock. Allow unit to cool and drain unit to prevent spillage during repairs. Failure to comply could result in personal injury.

(1) Unplug power cord from outlet receptacle.

(2) Remove L.H. side and back panel (Refer to para 4.2).

(3) Drain water from reservoir (Refer to para 4.7).

NOTE

Both the vent and fill valve must be removed as an assembly before they can be disassembled and replaced individually.

(4) Tag and disconnect two wires (1, Figure 4-27) from terminals of vent solenoid valve (2) and two wires (3) from terminals of fill solenoid valve (4).

EQUIPMENT ALERT

There may be water left in tubing connected from bottom of reservoir to fill solenoid valve. Place paper towel or equivalent beneath connection to soak up any water.

(5) Loosen three compression nuts (5) and then remove solenoid valve assembly (6) from unit.

(6) Remove male fitting (7) from fill solenoid valve (4) and elbow (8) from vent solenoid valve (2).

(7) Remove fill solenoid valve (4) and vent solenoid valve (2) from tee assembly (9).

© Midmark Corporation 1999 SF-1597

Printed in U.S.A.

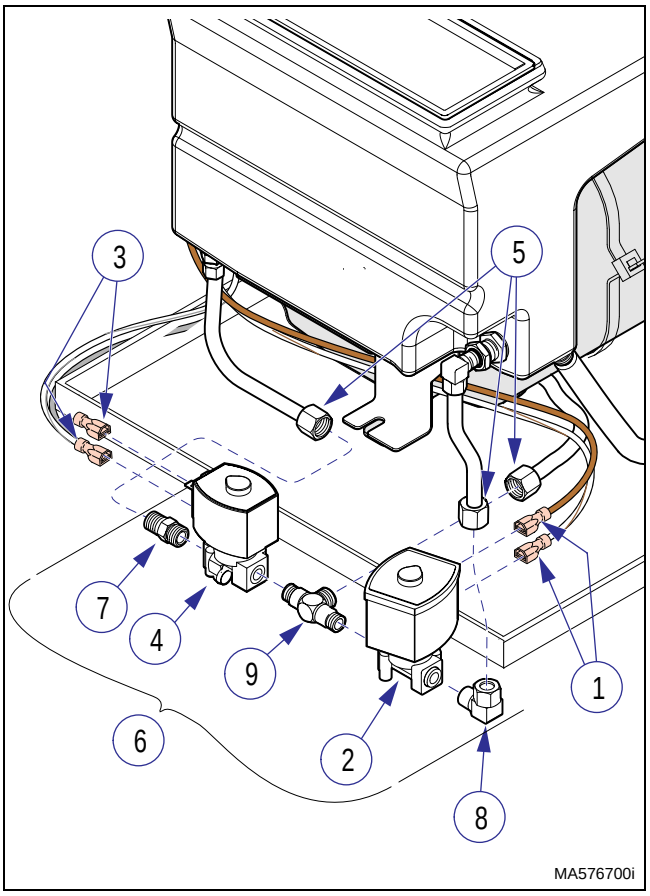

Figure 4-27. Vent or Fill Solenoid Valve

B. Installation

EQUIPMENT ALERT
Use a pipe thread compound on the sterilizer fittings capable of withstanding the operating pressures and temperatures. Do *not* use a teflon tape as particles may migrate through system and cause blockage.

(1) Coat threads of tee assembly (9, Figure 4-27) with high temperature pipe thread compound (Loctite 565).

EQUIPMENT ALERT
The fill and vent solenoid valve have inlet and outlet ports. The inlet ports are labeled “1” and the outlet ports are labeled “2”. The inlet ports “1” of both valves must be connected to tee assembly (9). Failure to do so will result in unit malfunction.

(2) Install vent solenoid valve (2) and fill solenoid valve (4) on tee assembly (9), making sure ports “1” are facing tee assembly.

(3) Coat threads of male fitting (7) and elbow (8) with high temperature pipe thread compound (Loctite 565).

(4) Install male fitting (7) on fill solenoid valve (4) and elbow (8) on vent solenoid valve (2).

(5) Position solenoid valve assembly (6) in unit; then tighten three compression nuts (5). If necessary, replace any damaged compression sleeves (9).

(6) Connect two wires (3) to terminals of fill solenoid valve (4) and two wires (1) to terminals of vent solenoid valve (2).

WARNING
With the side panel off while running a cycle, use care to prevent burning self on hot fittings, tubing and components. Do not touch exposed electrical components or terminals. Serious personal injury due to electrical shock could occur.

(7) Run Service Diagnostics to check operation of Vent or Fill Solenoid Valve (2) (refer to Service Diagnostics [Vent or Fill Valve Test], Para 2.2).

(8) Refill reservoir with distilled or demineralized water (Refer to para 4.7).

(9) Plug unit in, run a cycle to place pressure on lines and fittings; then check for leaks.

(10) Install L.H. side and back panel (Refer to para 4.2).

(11) Plug power cord into outlet receptacle.

© Midmark Corporation 1999 SF-1597

Printed in U.S.A.

4.28 Auxiliary (Upper) Hi-Limit Switch

A. Removal

WARNING
Always disconnect power cord from outlet receptacle before removing any sterilizer covers/panels or making any repairs to prevent possibility of electrical shock. Allow unit to cool and drain unit to prevent spillage during repairs. Failure to comply could result in personal injury.

(1) Unplug power cord from outlet receptacle.

(2) Remove L.H. side and back panel (Refer to para 4.2).

(3) Remove top cover (Refer to para 4.3).

(4) Tag and disconnect two wires (1, Figure 4-28) from two thermostat wires (2).

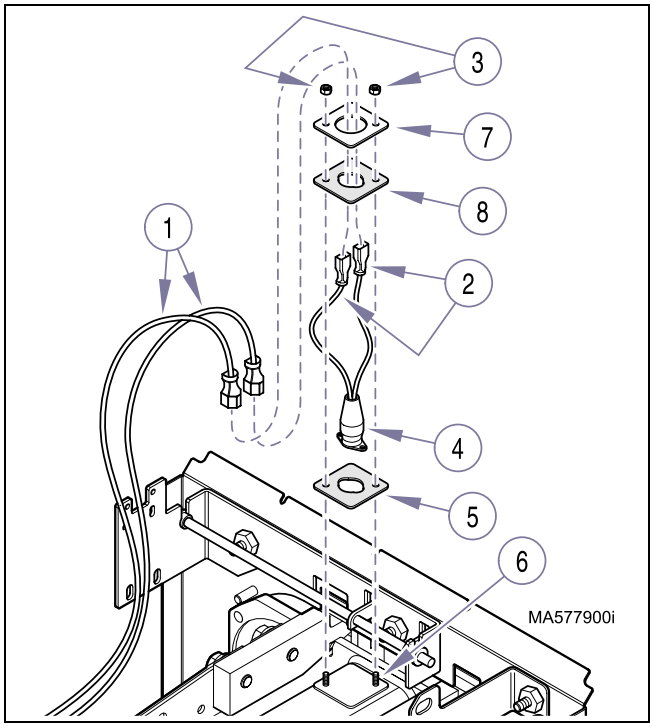

Figure 4-28. Auxiliary (Upper) Hi-Limit Switch

(5) Remove two locknuts (3), thermostat assembly (4), and thermostat insulator (5) from two studs (6).

(6) Remove thermostat clamp bracket (7) and thermostat insulator (8) from thermostat assembly (4).

B. Installation

EQUIPMENT ALERT
The thermostat insulator(s) (5, 8, Figure 4-28) must be installed in their proper locations or the unit may not function correctly.

(1) Install thermostat insulator (8, Figure 4-28) and thermostat clamp bracket (7) onto thermostat assembly (4).

(2) Install thermostat insulator (5) and thermostat assembly (4) on two studs (6) and secure with two locknuts (3).

(3) Connect two wires (1) to two thermostat wires (2).

(4) Install top cover (Refer to para 4.3).

(5) Install L.H. side and back panel (Refer to para 4.2).

(6) Plug power cord into outlet receptacle.

4.29 Lower Hi-Limit Switch

A. Removal

WARNING
Always disconnect power cord from outlet receptacle before removing any sterilizer covers/panels or making any repairs to prevent possibility of electrical shock. Allow unit to cool and drain unit to prevent spillage during repairs. Failure to comply could result in personal injury.

(1) Unplug power cord from outlet receptacle.

(2) Drain water from reservoir (Refer to para 4.7).

(3) Remove R.H. side panel (Refer to para 4.2).

(4) Lay sterilizer over onto its left side.

(5) Remove two locknuts (1, Figure 4-29) from two studs (2); then raise up PC board bracket (3) and position it out way.

© Midmark Corporation 1999 SF-1597

Printed in U.S.A.

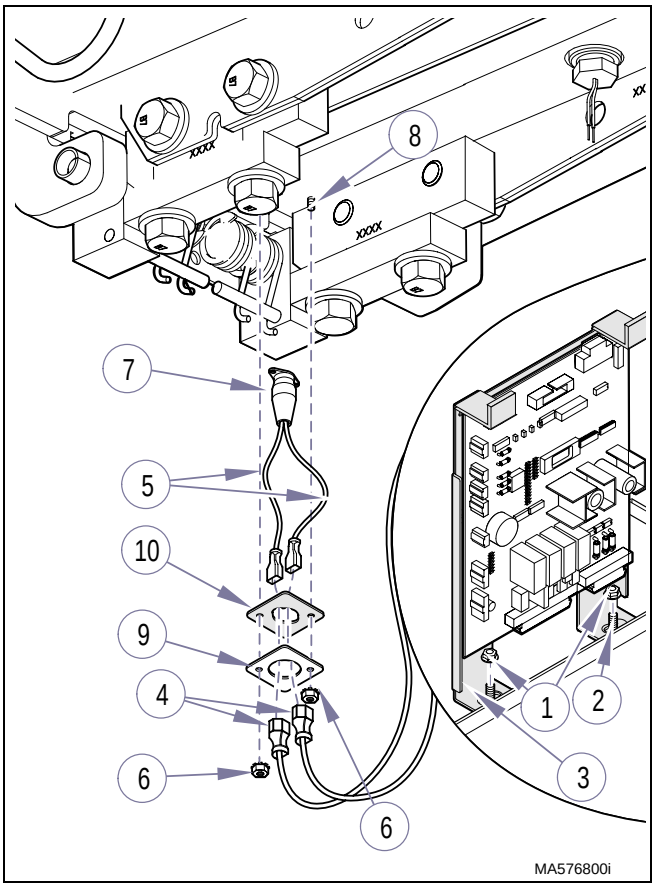

Figure 4-29. Lower Hi-Limit Switch

(6) Tag and disconnect two wires (4, Figure 4-29) from two thermostat wires (5).

(7) Remove two locknuts (6) and thermostat assembly (7) from two studs (8).

(8) Remove thermostat clamp bracket (9) and thermostat insulator (10) from thermostat assembly (7).

B. Installation

EQUIPMENT ALERT
The thermostat insulator (10, Figure 4-29) must be installed in its proper locations or the unit may not function correctly.

(1) Install thermostat insulator (10, Figure 4-29) and thermostat clamp bracket onto thermostat assembly (7).

(2) Install thermostat assembly (4) thermostat insulator (10) and thermostat clamp bracket (9) on two studs (6) and secure with two locknuts (6).

(3) Connect two wires (4) to two thermostat wires (5).

(4) Raise up sterilizer to upright position.

(5) Install PC board bracket (3) on two studs (2) and secure with two locknuts (1).

(6) Install R.H. side panel (Refer to para 4.2).

(7) Refill reservoir with distilled water (Refer to para 4.7).

(8) Plug power cord into outlet receptacle.

© Midmark Corporation 1999 SF-1597

Printed in U.S.A.

4.30 Lower Temperature Probe

A. Removal

WARNING
Always disconnect power cord from outlet receptacle before removing any sterilizer covers/panels or making any repairs to prevent possibility of electrical shock. Allow unit to cool and drain unit to prevent spillage during repairs. Failure to comply could result in personal injury.

(1) Unplug power cord from outlet receptacle.

(2) Drain water from reservoir (Refer to para 4.7).

(3) Remove R.H. side panel (Refer to para 4.2.

(4) Lay sterilizer over onto its left side.

(5) Disconnect temperature probe harness (1, Figure 4-30) from connector J3 (2) on main control p.c. board.

(6) Remove screw (3) and base access panel (4) from base weldment (5).

(7) Using a 5/8" or 9/16" wrench, unscrew trough temperature sensor (6) from chamber (7).

B. Installation

EQUIPMENT ALERT
Use a pipe thread compound on the sterilizer fittings capable of withstanding the operating pressures and temperatures. Do *not* use a teflon tape as particles may migrate through system and cause blockage.

(1) Coat threads of trough temperature sensor (6, Figure 4-30) with high temperature pipe thread compound (Loctite 565).

(2) Using a 5/8 in. wrench, screw trough temperature probe (6) into chamber (7).

(3) Connect temperature probe harness (1) to connector J3 (2) on main p.c. board.

(4) Install base access panel (4) on base weldment (5).

(5) Raise up sterilizer to upright position.

(6) Refill reservoir with distilled water (Refer to para 4.7).

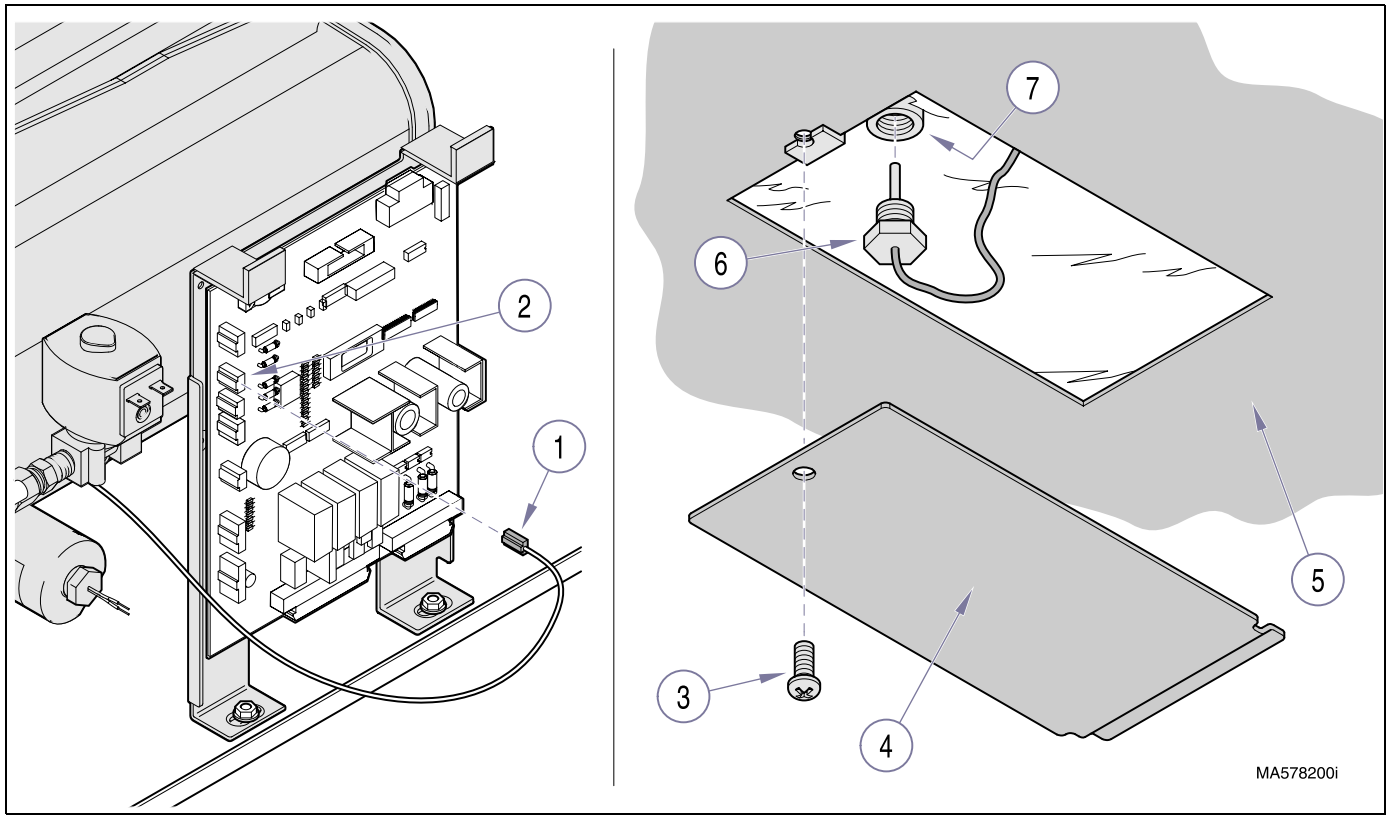

Figure 4-30. Lower Temperature Probe

© Midmark Corporation 1999 SF-1597

Printed in U.S.A.

(7) Plug unit in, run a cycle to place pressure on lines and fittings; then check for leaks.

(8) Install R.H. side panel (Refer to para 4.2).

(9) Plug power cord into outlet receptacle.

4.31 Lower (Steam) Heating Element

A. Removal

WARNING
Before working on unit, disconnect power cord from outlet. Allow unit to cool and assure all pressure is removed from chamber. Failure to comply could result in personal injury.

(1) Unplug Sterilizer from outlet.

(2) Open door and remove all trays and tray rack (refer to para 4.6).

(3) Using a sponge or equivalent, remove any water left in lower trough.

(4) Remove back panel (refer to para 4.2).

(5) Tag electrical leads (1, Figure 4-31) for later installation then, disconnect leads from terminals of heating element (2).

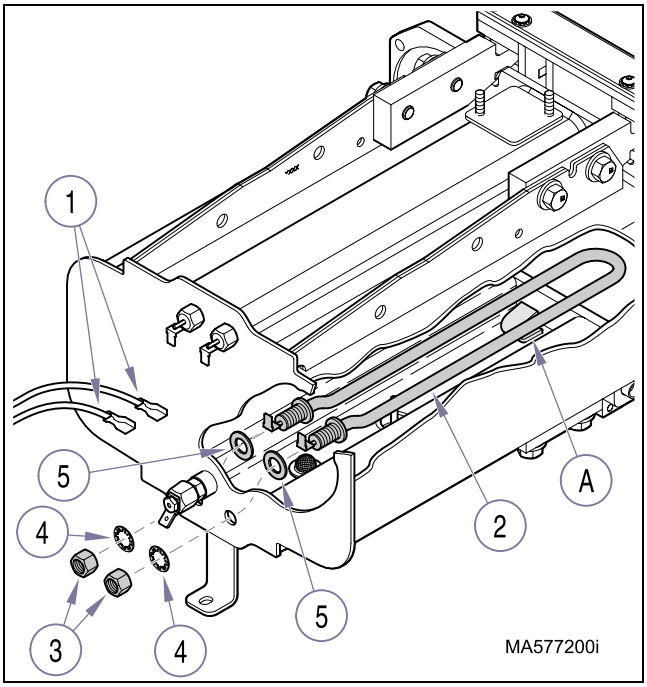

Figure 4-31. Lower (Steam) Heating Element

(6) Remove nuts (3) and washers (4) that secure heating element (2) to chamber.

(7) Reach inside chamber, slide heating element (2) forward until it is disengaged from hook bracket (A) and remove element.

B. Installation

EQUIPMENT ALERT
The heating element (2, Figure 4-31) is slightly bent on ends near electrical connections. When installing into holes in back of chamber, these bends must be sloped upward.
Assure front of heater element is secured in hook bracket (A) located in trough.

(1) Install heater gaskets (5, Figure 4-31) on ends of heating element (2) and install element in chamber trough threading terminal ends of element thru back holes in chamber.

(2) Place washers (4) in position on ends of heating element (2).

EQUIPMENT ALERT
The torque applied to heating element nuts should not exceed 30 ft./lbs. (40.7 N•M).

(3) Install nuts (3) on ends of heating element (2) and tighten. Do not exceed maximum torque.

(4) Connect electrical leads (1).

(5) Install tray rack and trays (refer to Para 4.6).

WARNING
With the back panel off while running a cycle, use care to prevent burning self on hot fittings, tubing and components. Do not touch exposed electrical components or terminals. Serious personal injury due to electrical shock could occur.

(6) Plug unit into electrical outlet and run a cycle, then check for leaks.

(7) Unplug unit, install back panel (refer to para 4.2).

(8) Plug unit into electrical outlet.

© Midmark Corporation 1999 SF-1597

Printed in U.S.A.

4.32 Upper Heating Element

A. Removal

WARNING
Before working on unit, disconnect power cord from outlet. Allow unit to cool and assure all pressure is removed from chamber. Failure to comply could result in personal injury.

(1) Unplug Sterilizer from outlet.

(2) Open door and remove all trays and tray rack (refer to para 4.6).

(3) Remove reservoir (refer to para 4.35).

(4) Tag electrical leads (1, Figure 4-32) for later installation then, disconnect leads from terminals of heating element (2).

(5) Remove nuts (3) and washers (4) that secure heating element (2) to chamber.

NOTE
The upper heating element (2) is connected to the upper tray plate weldment (5) and secured to the top of the chamber by a hook bracket (A).
Both the element (2) and weldment (5) must be slid forward (toward door opening) to disengage the element (2) from the hook bracket (A) for removal.
Inserting a small punch thru one of the holes of the weldment near the end of the element will enable the element to be slid forward while carefully prying downward on the weldment.

(6) To disengage heating element (2) from hook bracket (A), carefully slide the element forward (toward door opening) while prying downward on upper tray plate weldment (5) and remove the assembly.

(7) Slide heating element (2) from upper tray plate weldment (5).

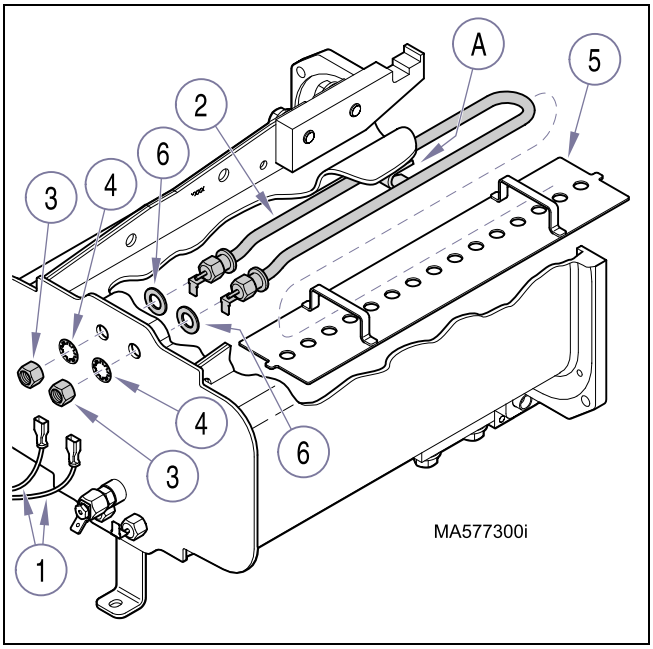

Figure 4-32. Upper Heating Element

B. Installation

EQUIPMENT ALERT
The heating element (2, Figure 4-32) is slightly bent on the ends near the electrical connections. When installing into holes in back of chamber, the bends must be sloped downward. Assure the front of the heater element is secured in the hook bracket (A) located in front of chamber.

(1) Install heater gaskets (6, Figure 4-32) on ends of heating element (2) and place element in position on upper tray plate weldment (5).

NOTE
The heating element (2) must be slid inward until element engages in hook bracket (A) that secures it to top of chamber.
Inserting a small punch thru one of the holes of the upper tray plate weldment (5), near the end, will enable the element to be slid inward while carefully pushing upward on the weldment.

© Midmark Corporation 1999 SF-1597

Printed in U.S.A.

(2) Install heating element (2) and upper tray plate weldment (5) in position in top of chamber. Insert terminal ends of element thru holes in back of chamber. Assure heating element (2) is secured in hook bracket (A).

EQUIPMENT ALERT
The torque applied to heating element nuts should not exceed 30 ft./lbs. (40.7 N•M).

(3) Install nuts (3) on ends of heating element (2) and tighten. Do not exceed maximum torque.

(4) Connect electrical leads (1).

(5) Install tray rack and trays (refer to Para 4.6).

WARNING
With the back panel off while running a cycle, use care to prevent burning self on hot fittings, tubing and components. Do not touch exposed electrical components or terminals. Serious personal injury due to electrical shock could occur.

(6) Plug unit into electrical outlet and run a cycle, then check for leaks.

(7) Unplug unit, install back panel (refer to para 4.2).

(8) Plug unit into electrical outlet.

4.33 Water Level Sensor

A. Removal

WARNING
Before working on unit, disconnect power cord from outlet. Allow unit to cool and assure all pressure is removed from chamber. Failure to comply could result in personal injury.

(1) Unplug Sterilizer from outlet and allow unit to cool.

(2) Remove right side and back panels (refer to Para 4.2).

NOTE
Water Level Sensor is protruding through back side of sterilizer chamber, beneath the reservoir. To prevent leakage, water must be removed from chamber trough before removal of sensor.

(3) Open door and remove all trays and tray rack (refer to para 4.6).

(4) Using a sponge or equivalent, remove water from trough until it is below water level sensor probe.

(5) For access, disconnect leads (1, Figure 4-33) from terminals of lower (steam) heater.

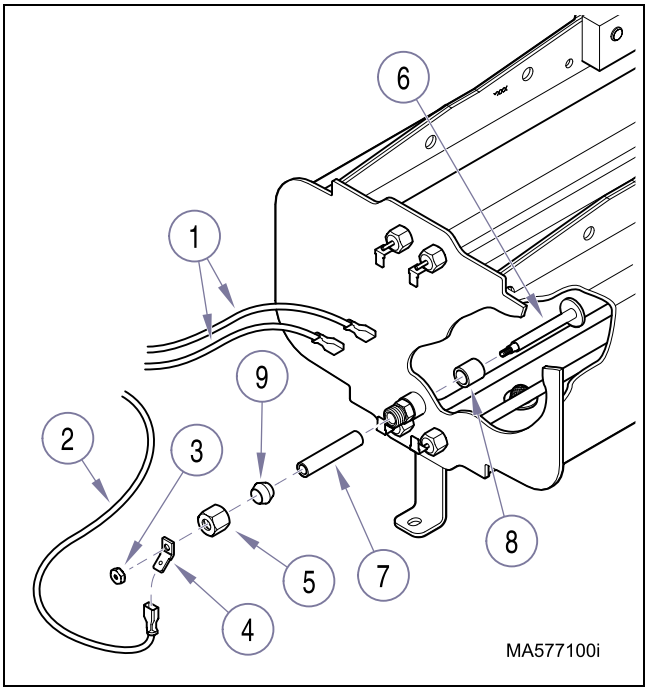

Figure 4-33. Water Level Sensor

(6) Disconnect electrical lead (2) from outside end of water level sensor stud.

NOTE
It may be necessary to hold the level sensor from inside the chamber to prevent movement during disassembly

(7) Remove the nut (3) and terminal (4).

© Midmark Corporation 1999 SF-1597

Printed in U.S.A.

(8) Remove compression nut (5).

(9) Push level sensor (6) thru chamber wall to inside of chamber and remove.

B. Installation

(1) Install teflon tube (7, Figure 4-33) and spacer (8) onto level sensor (6) and, insert from inside chamber, thru chamber wall.

EQUIPMENT ALERT
Do **not** over-tighten compression fitting or the ferrule could cut through the teflon sleeve resulting in the sensor shorting out. Tighten 1 1/4 turns from finger tight.

(2) Install compression nut (5) and sleeve (9). Do **not** over-tighten. Tighten 1 1/4 turns from finger tight and then install terminal (4) and nut (3).

EQUIPMENT ALERT
Before installing electrical leads, use an ohmmeter and check to assure sensor is not grounded to chamber. No continuity reading should be present.

(3) Check to assure the sensor is not grounded against the chamber using an ohmmeter. Place one probe on the sensor terminal (4) and the other on the chamber wall.

(4) Connect the electrical lead (2) to the sensor terminal (4).

(5) Install the electrical leads (1) onto the terminals of lower (steam) heater.

WARNING
With the side panel off while running a cycle, use care to prevent burning self on hot fittings, tubing and components. Do not touch exposed electrical components or terminals. Serious personal injury due to electrical shock could occur.

(6) Run a cycle and check for leaks around the sensor fittings.

(7) Unplug unit and install panels (refer to Para 4.2).

(8) Plug unit in electrical outlet.

4.34 Vent Muffler

A. Removal

WARNING
Always disconnect power cord from outlet before removing any sterilizer covers/panels or making any repairs to prevent possibility of electrical shock. Allow unit to cool, assure all pressure is removed from unit, and drain unit to prevent spillage during repairs. Failure to comply could result in personal injury.

(1) Unplug table power cord from wall outlet.

(2) Drain the reservoir (refer to Para 4.7).

(3) Remove top cover and panels (refer to para(s) 4.2 and 4.3).

NOTE
The reservoir tank lid (1, Figure 4-34) has a bead of silicone around it to prevent condensation from escaping during operation. This silicone must be removed in order to remove the lid and then later reinstalled.

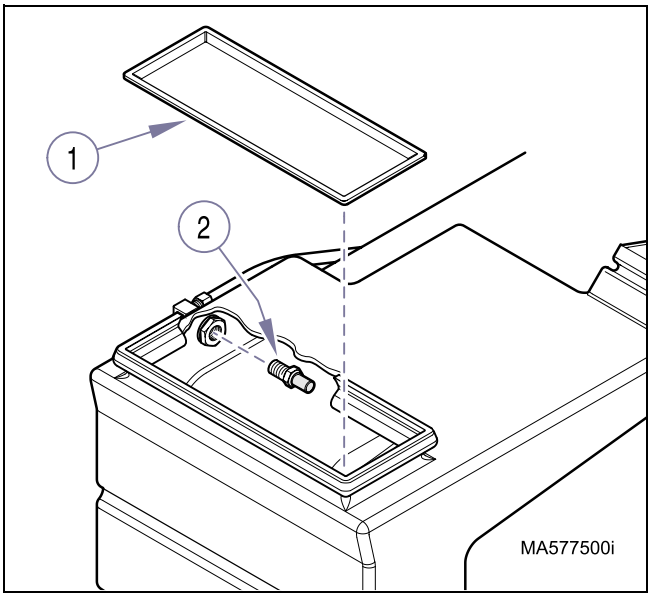

Figure 4-34. Vent Muffler

(4) Remove the silicone sealant from around the reservoir tank lid (1, Figure 4-34) and remove the lid.

© Midmark Corporation 1999 SF-1597

Printed in U.S.A.

(5) Using a 9/16" deep well, socket, remove the vent muffler (2).

B. Installation

(1) Place the Vent Muffler (2, Figure 4-34) in position and tighten 1/4 turn past hand tight.

EQUIPMENT ALERT
The reservoir tank lid must be sealed to the reservoir with silicone sealant, Dow Corning RTV 732 or equivalent. Failure to comply could result in equipment damage or failure.

(2) Place the reservoir tank lid (1) in position and seal to reservoir with silicone sealant, Dow Corning RTV 732 or equivalent.

(3) Install top cover and panels (refer to para(s) 4.2 and 4.3.

(4) Fill the reservoir to the proper level with distilled water and run an operation to check system.

4.35 Reservoir Assy. (w/Condensing Coil)

A. Removal

WARNING
<u>Always</u> disconnect power cord from outlet before removing any sterilizer covers/panels or making any repairs to prevent possibility of electrical shock. Allow unit to cool, assure all pressure is removed from unit, and drain unit to prevent spillage during repairs. Failure to comply could result in personal injury.

(1) Unplug table power cord from wall outlet.

(2) Drain the reservoir (refer to Para 4.7).

(3) Remove top cover and panels (refer to para(s) 4.2 and 4.3).

EQUIPMENT ALERT
Place paper towel or equivalent across controls in base of unit to prevent any residual water left in various tubing from contacting and / or damaging controls.

(4) Disconnect Air Valve tubing (1,Figure 4-35) at top of reservoir (2).

(5) Disconnect Fill Valve tubing (3), Vent Valve tubing (4) and Drain tubing (5).

(6) Remove two mounting nuts (6) and bolt (7) from mounting brackets and remove reservoir (2).

B. Disassembly

NOTE
The reservoir tank lid (8, Figure 4-35) has a bead of silicone around it to prevent condensation from escaping during operation. This silicone must be removed in order to remove the lid and then later reinstalled.

(1) Remove the silicone sealant from around the reservoir tank lid (8, Figure 4-35) and remove the lid.

(2) Remove the condensing coil and fitting assembly (9).

(3) Remove the water level tube assembly (10).

© Midmark Corporation 1999 SF-1597

Printed in U.S.A.

(4) Remove the vent muffler fitting assembly (11).

(5) Remove the lower bracket (12), two screws.

C. Assembly

EQUIPMENT ALERT
To prevent leakage, always use new bulkhead, fitting washers (13, Figure 4-35) when re-installing the various fitting assemblies on the reservoir.

(1) Using new bulkhead fitting washers (13, Figure 4-35), install the vent muffler fitting assembly (11), water level tube assembly (10), and condensing coil and fitting assembly (9).

(2) Install the lower bracket (12), two screws.

EQUIPMENT ALERT
The reservoir tank lid (8) must be sealed to the reservoir (2) with silicone sealant, Dow Corning RTV 732 or equivalent. Failure to comply could result in equipment damage or failure.

(3) Place the reservoir tank lid (8) in position and seal to reservoir (2) with silicone sealant, Dow Corning RTV 732 or equivalent

D. Installation

(1) Place reservoir (2, Figure 4-35) in position and secure to mounting brackets with the mounting bolt (7) and nuts (6).

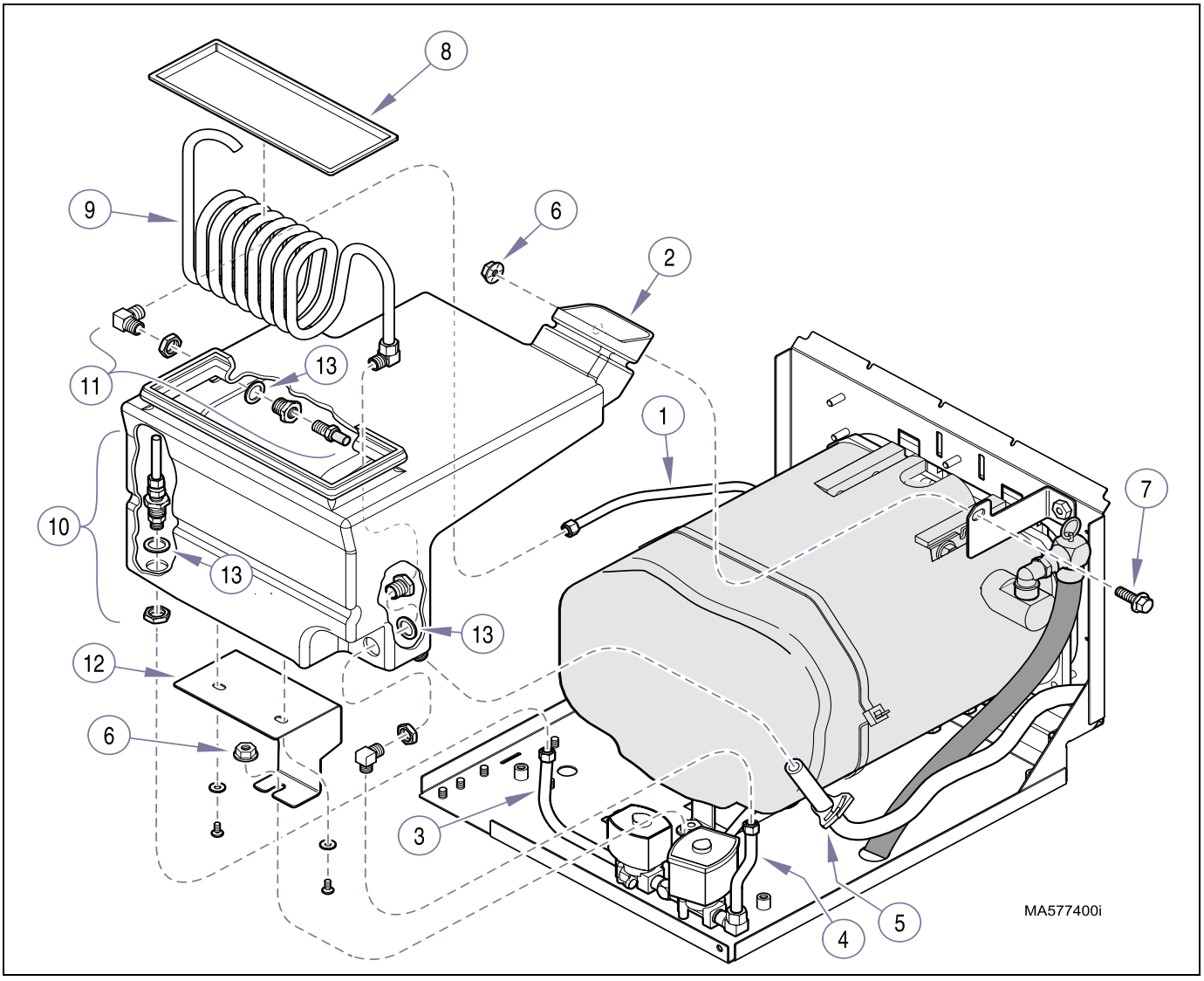

Figure 4-35. Reservoir

(2) Connect Drain tubing (5), Vent Valve tubing (4), Fill Valve tubing (3), and Air Valve tubing (1) to reservoir (2).

WARNING
With the side panel off while running a cycle, use care to prevent burning self on hot fittings, tubing and components. Do not touch exposed electrical components or terminals. Serious personal injury due to electrical shock could occur.

(3) Pour distilled water in reservoir.

(4) Plug unit into electrical outlet and run a cycle, then check for leaks.

(5) Unplug unit, install top and panels (refer to para(s) 4.2 and 4.3).

(6) Plug unit into electrical outlet.

4.36 Printer

A. Removal

WARNING
Before working on unit, disconnect power cord from outlet. Allow unit to cool and assure all pressure is removed from chamber. Failure to comply could result in personal injury.

(1) Unplug table power cord from wall outlet.

(2) Remove right side panel (refer to Para 4.2).

(3) Disconnect printer wire harness (1, Fig 4-36) from plug connector J8 on P.C. Board (2).

(4) Carefully lift printer assembly (3) from top cover (4) while pulling printer wire harness (1) out thru slot (A) of top cover.

(5) Slightly bend sides of printer assembly (3) outward until printer housing (5) can be pulled off locking tabs (B).

NOTE
Should it be necessary to install a new paper roll, cartridge ribbon, or perform maintenance on the printer, refer to the Installation / Operation Manual for the M4•9 Sterilizer or the Installation Instructions for the 9A259001 Printer Kit.

B. Installation

(1) Insert printer housing locking tabs (B, Figure 4-36) into slots of printer assembly (3).

(2) Route printer wire harness (1) thru slot (A) of top cover (4).

(3) Connect printer wire harness (1) to plug connector J8 on P.C. Board (2).

(4) Place printer in position on top cover (4).

(5) Install right side panel (refer to Para 4.2).

(6) Plug unit into outlet.

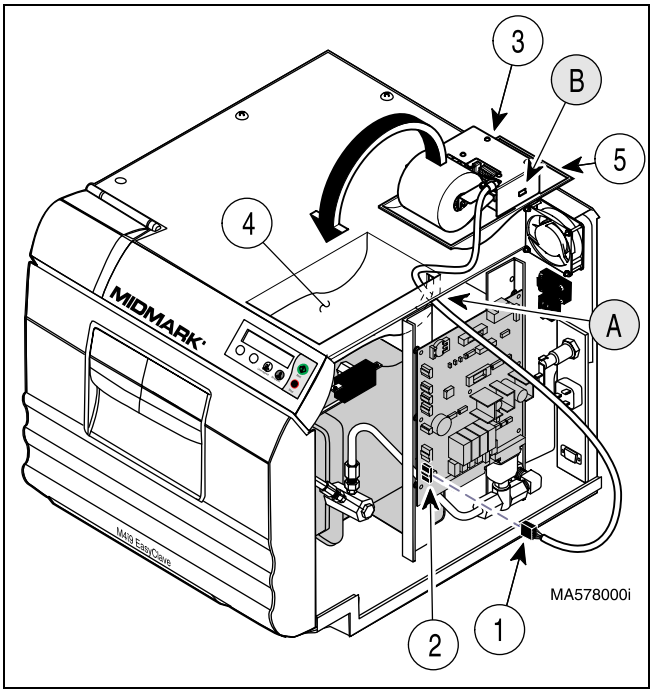

Figure 4-36. Printer

SECTION V
SCHEMATICS AND DIAGRAMS

5.1 SW2 Dip Switch Settings.

Switch	Position	Result
#8	OFF	Pressure displayed in Gauge Units **(PSIG)**.
	ON	Pressure displayed in Absolute Units **(PSIA)**.
#7	OFF	Display is in English **(°F Temperature / PSIG Gauge Pressure)**
	ON	Display is in Metric **(°C Temperature / kPa Pressure)**
#6	OFF	**Disabled**
	ON	***Do Not Use*****.** Factory Test Mode. Unusable in Field
#5	OFF	**Disabled**
	ON	***Do Not Use***. Factory Test Mode. Unusable in Field
#4	OFF	**Disabled**
	ON	**Zero Atmospheric Pressure Calibration** Allows Technician to reset what the sterilizer thinks is atmospheric pressure at the current conditions. Use If: a.) Always getting a code C642 (FILL MODE PRESSURE HIGH).
#3	OFF	**Disabled**
	ON	**Steam Temperature Calibration** Allows Technician to enter Steam Temperature offset data to memory. Use If: a.) Replacing Steam Temperature RTD. b.) Replacing P.C. Board. c.) Getting frequent TEMP. REG. WARNING d.) Getting frequent code C554 (Steam Temp. Reg.) e.) Getting frequent codes that an inaccurate Steam Temperature reading would contribute to.
#2	OFF	**Disabled**
	ON	**Pressure Calibration** Allows Technician to enter Pressure span and offset data to memory. Use If: a.) Replacing Pressure Transducer. b.) Replacing P.C. Board. c.) Getting frequent TEMP. REG. WARNING d.) Getting frequent code C554 (Steam Temp. Reg.) e.) Getting frequent codes that an inaccurate Pressure reading would contribute to.
#1	OFF	**Disabled**
	ON	**Service Diagnostics** Allows Technician to: a.) Turn ON / OFF all Outputs. b.) Verify Keypad functions. c.) Monitor Steam and Auxiliary Temperature readings.

NOTE:
For Switches # 1 thru # 6:

LOWER numbered switches take precedence over **HIGHER** numbered when **BOTH** switches are **ON**.
Example: If both Switch # 1 (Diagnostics) & Switch # 3 Steam Temperature Calibration were ON, Switch # 1 would take priority over # 3.

© Midmark Corporation 2000 SF-1597

Printed in U.S.A.

SECTION V
SCHEMATICS AND DIAGRAMS

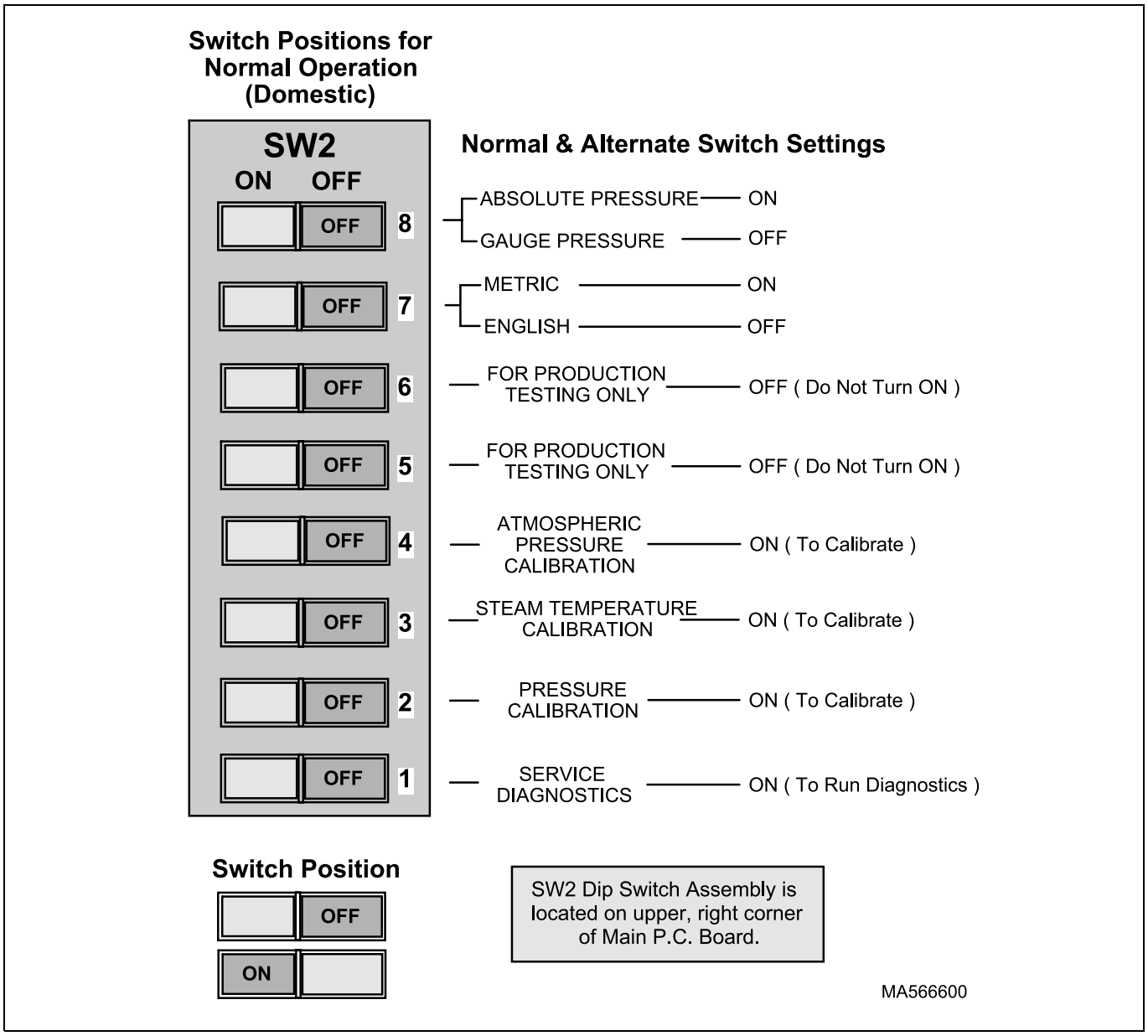

© Midmark Corporation 2000 SF-1597

Printed in U.S.A.

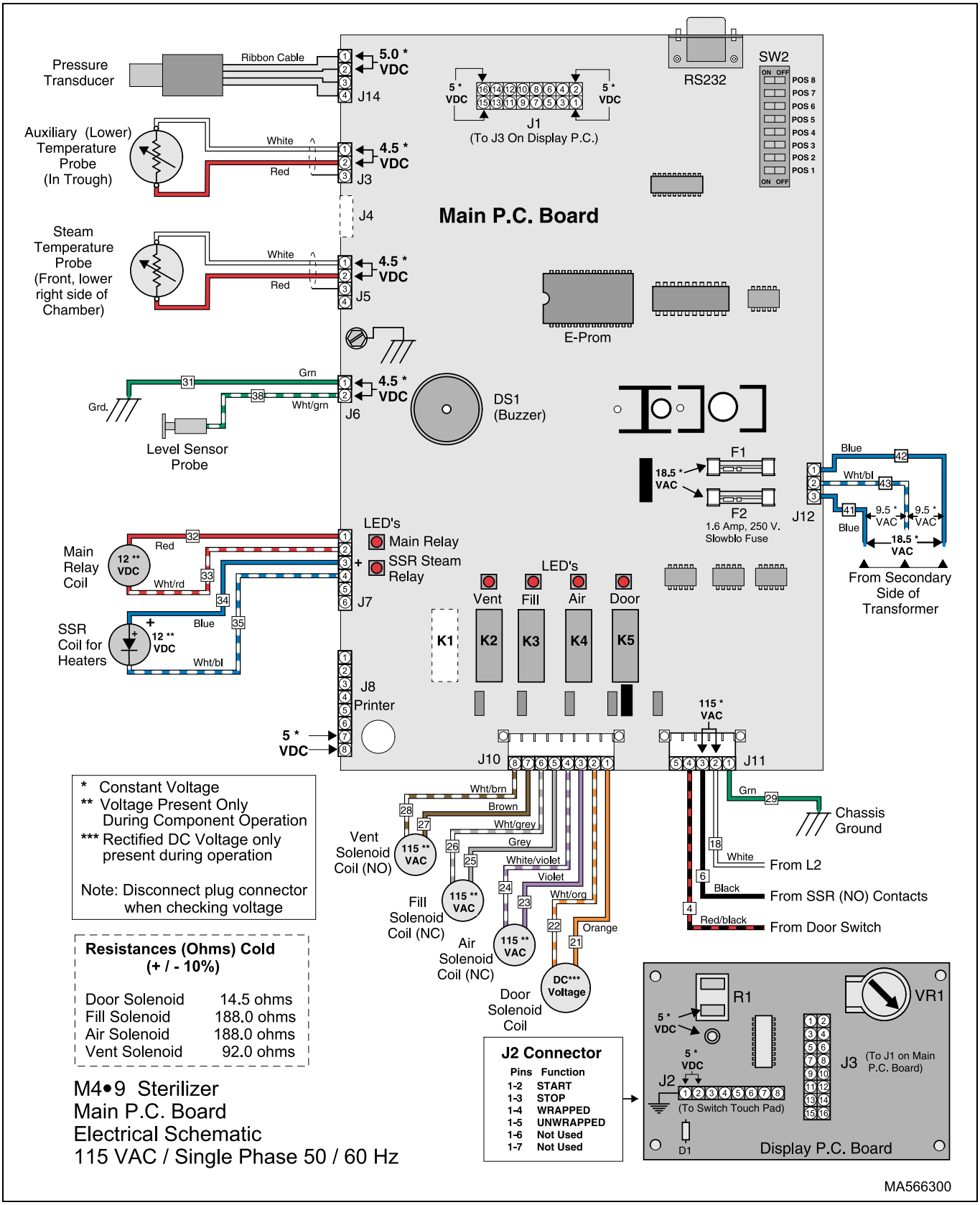

Figure 5-2. Component Layout Main Control P.C. Board
Model M 4•9-001 Sterilizer (115 VAC / 12 Amp 50/60 Cycle)

SECTION V
SCHEMATICS AND DIAGRAMS

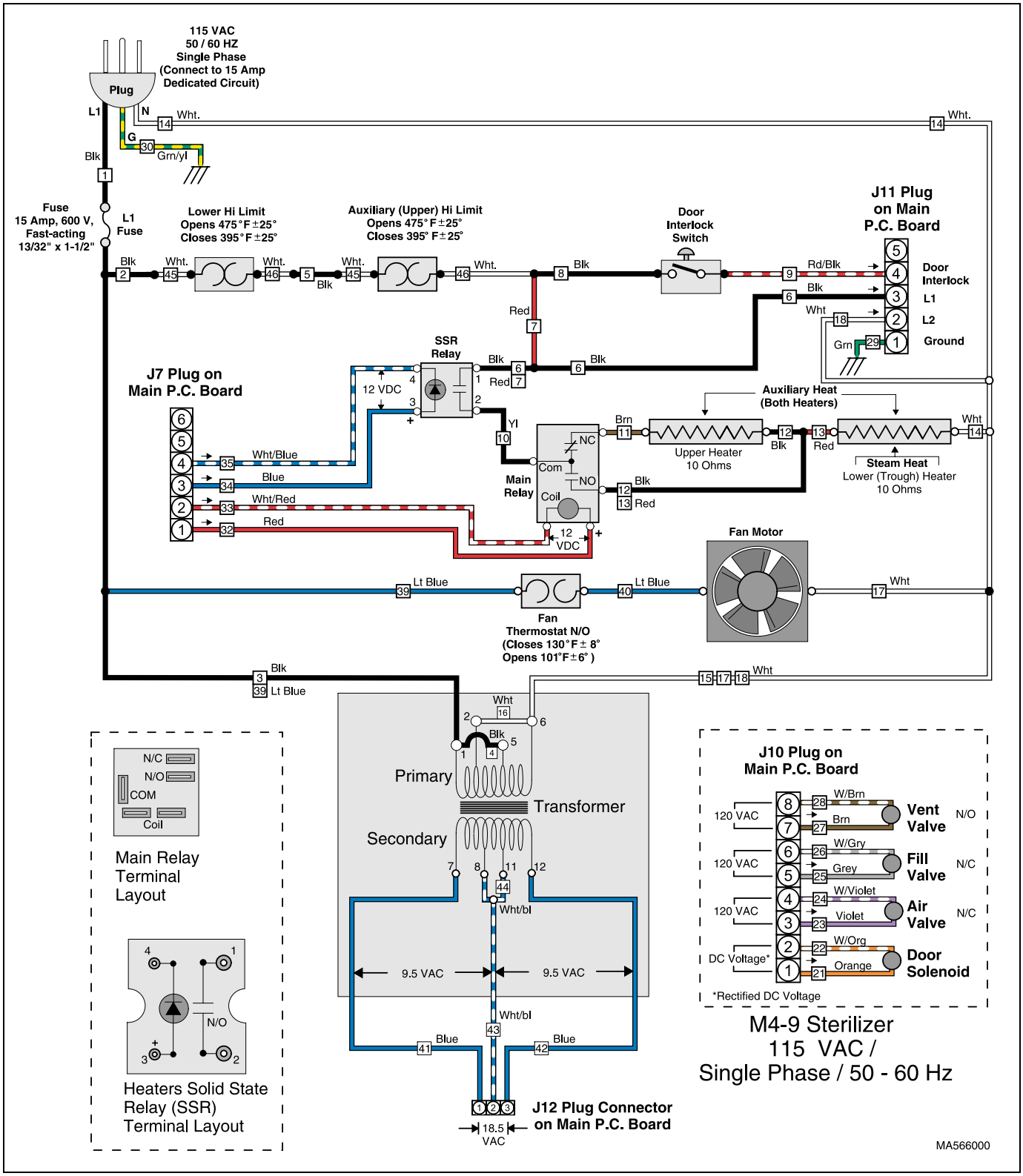

Figure 5-3. Schematic Diagram
Model M 4•9-001 Sterilizer (115 VAC / 12 Amp 50/60 Cycle)

© Midmark Corporation 2000 SF-1597

Printed in U.S.A.

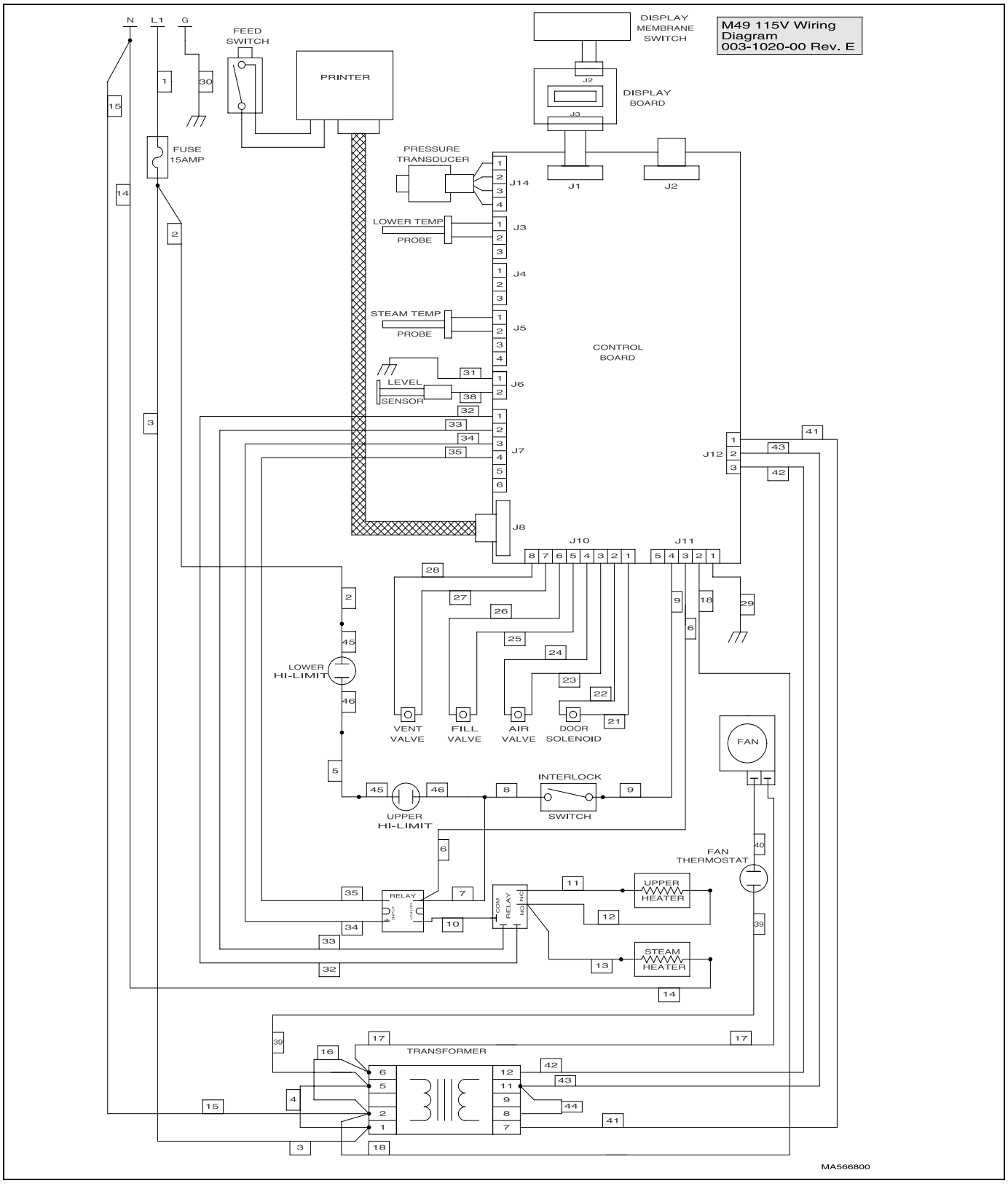

Figure 5-4. Wiring Diagram
Model M 4•9-001 Sterilizer (115 VAC / 12 Amp / 50/60 Cycle)

SECTION V
SCHEMATICS AND DIAGRAMS

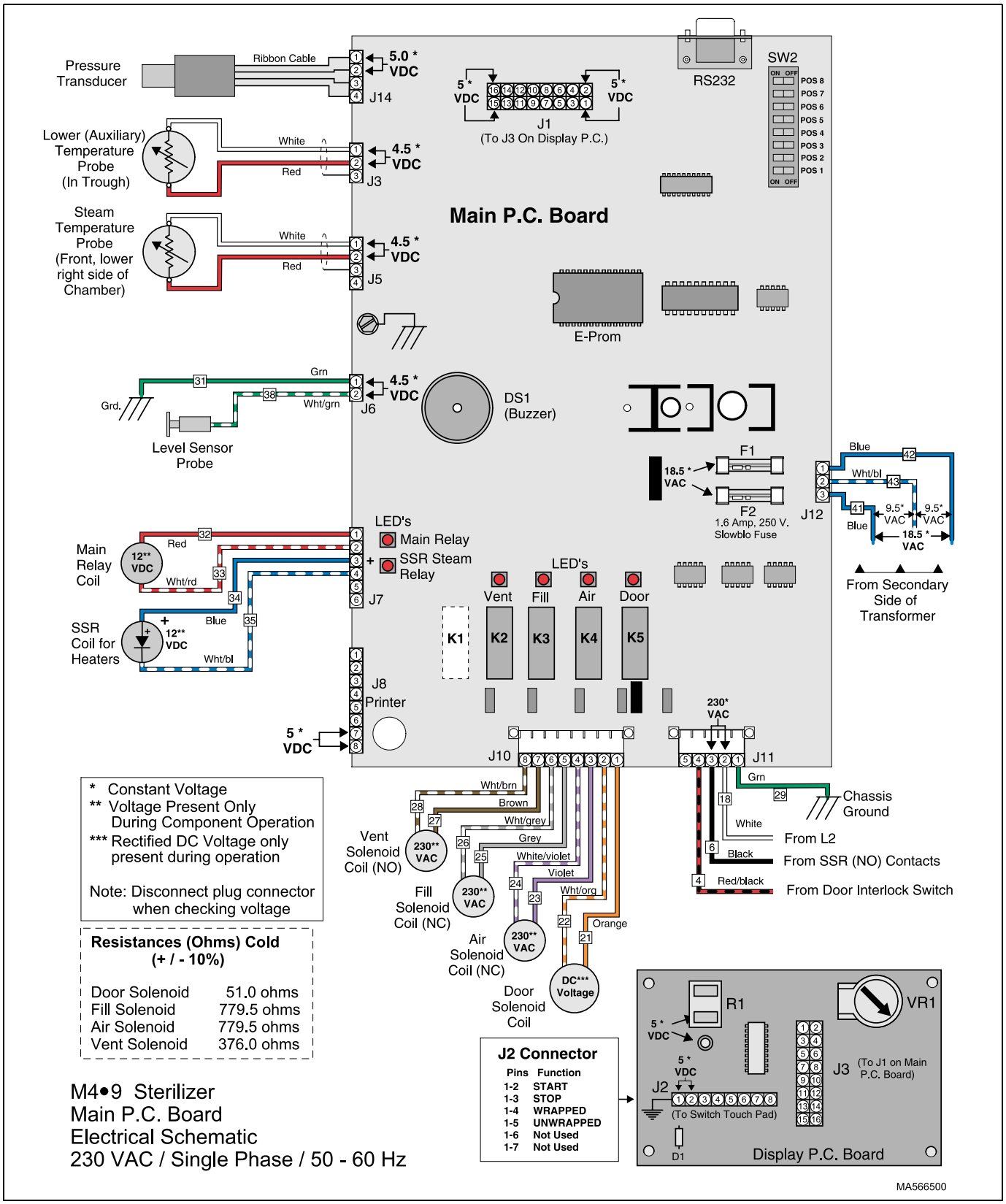

Figure 5-5. Component Layout Main Control P.C. Board
Model M 4•9-001 Sterilizer (230 VAC / 6.5 Amp / 50/60 Cycle)

© Midmark Corporation 2000 SF-1597

Printed in U.S.A.

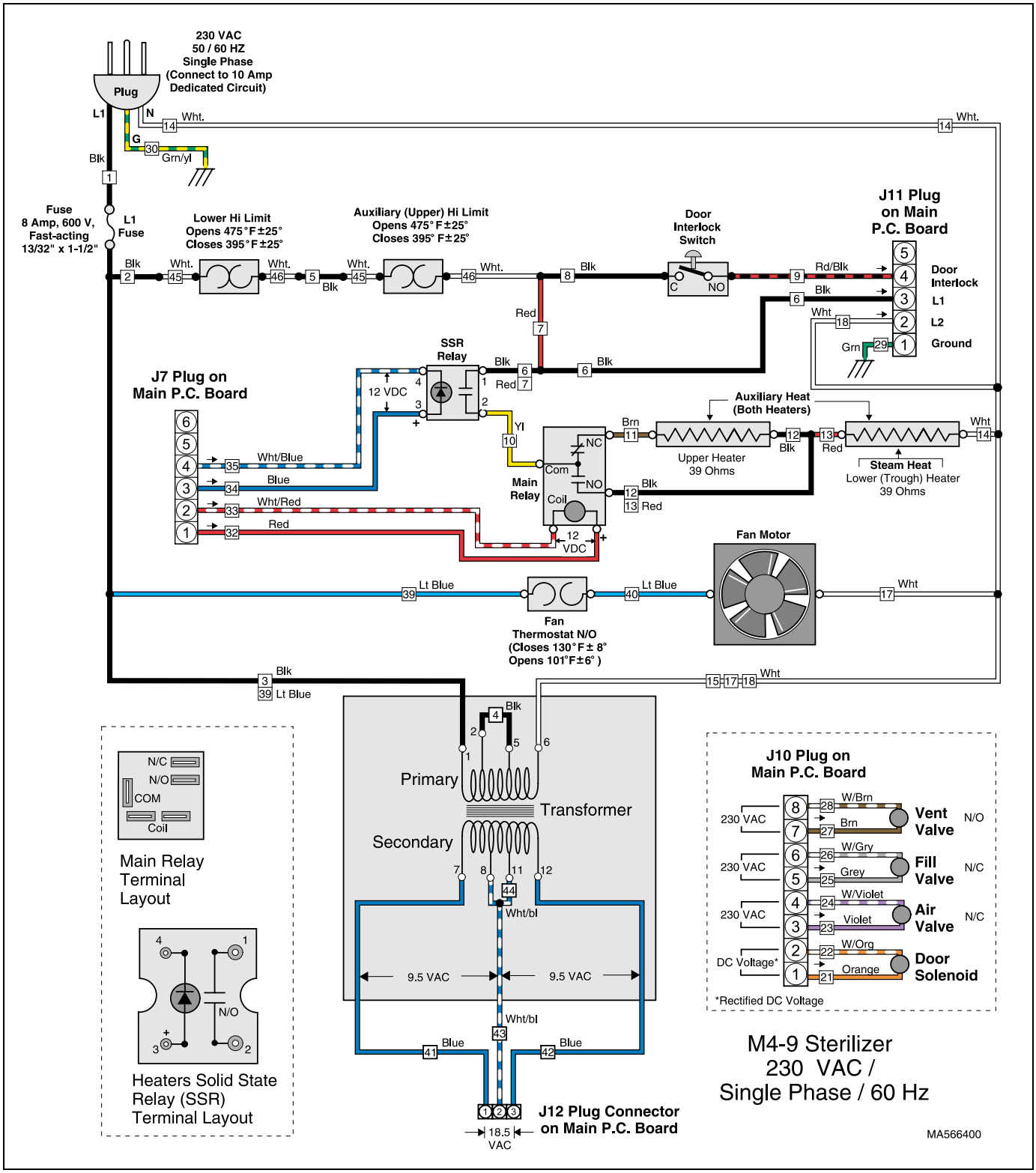

Figure 5-6. Schematic Diagram
Model M 4•9-001 Sterilizer (230 VAC / 6.5 Amp / 50/60 Cycle)

SECTION V
SCHEMATICS AND DIAGRAMS

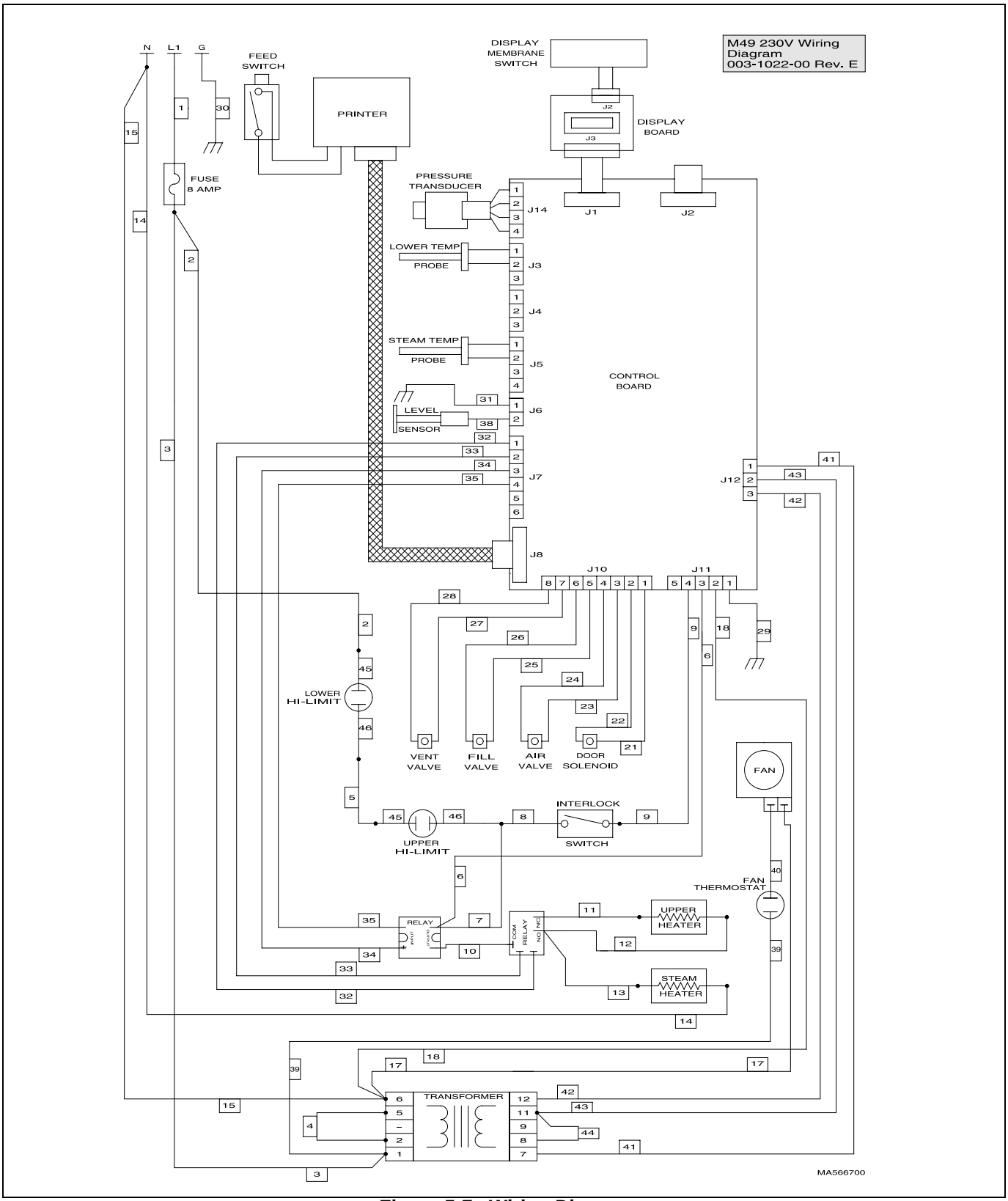

Figure 5-7. Wiring Diagram
Model M 4•9-001 Sterilizer (230 VAC / 6.5 Amp / 50/60 Cycle)

© Midmark Corporation 2000 SF-1597

Printed in U.S.A.

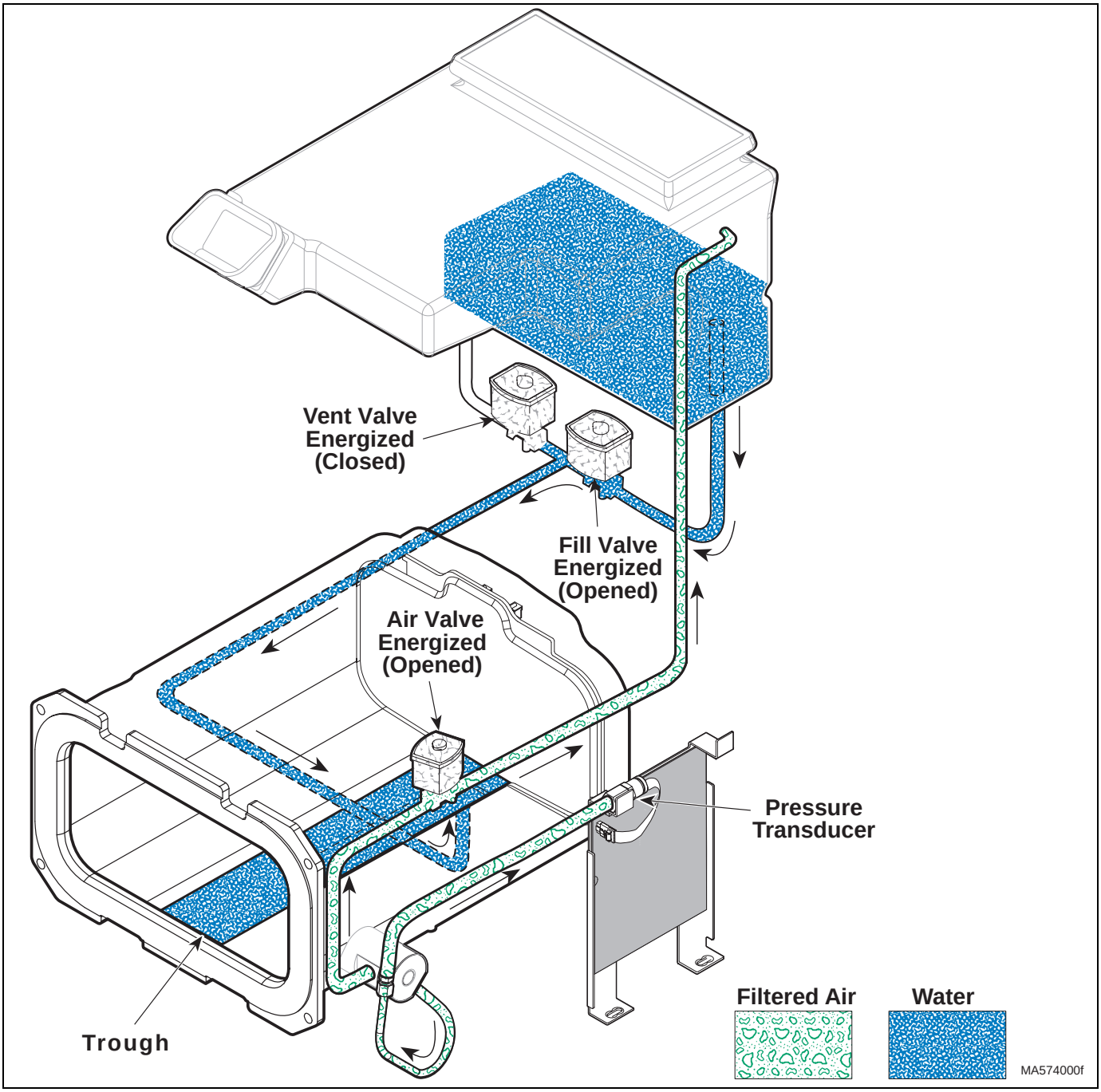

Figure 5-8. Fill Mode.

5.2 Fill Mode

K3 contacts on Main Control P.C. Board close.
Fill Valve solenoid coil energizes,opening valve.
Water from reservoir enters trough of chamber.
K2 contacts on Main Control P.C. Board close.
Vent Valve solenoid coil energizes, closing the normally open valve.
K4 contacts on Main Control P.C. Board close.
Air Valve solenoid coil energizes, opening valve.
Main Relay coil energizes, changing position of contacts. Normally open contacts close and normally closed contacts open.
Water reaches level of Water Level Sensor sending a signal back to the Main Control P.C. Board.
K3 contacts on Main Control P.C. Board open.
Fill Valve closes stopping water flow into chamber.

© Midmark Corporation 2000 SF-1597

Printed in U.S.A.

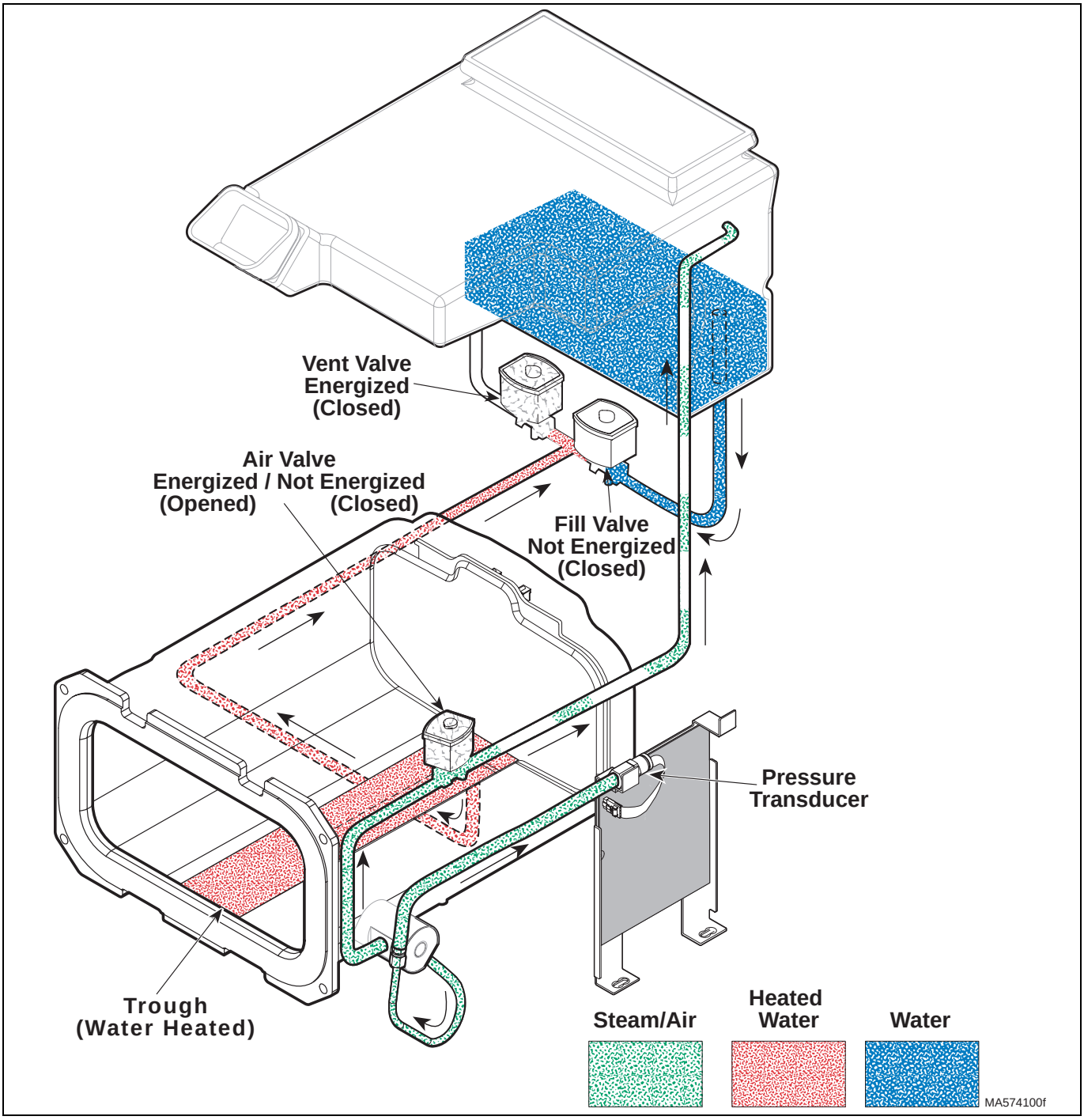

Figure 5-9. Heating Mode.

5.3 Heating Mode

Solid State Relay (SSR) energizes, providing a path for current to the Main Relay.
With the Main Relay coil energized, the Normally Open contacts are closed and current is supplied to the Lower (Steam) Heater.
Air Valve, being open, expels air from chamber.
When temperature reaches 210°F (99°C) K4 contacts open.
Air Valve closes, allowing pressure to build up in chamber.
Chamber pressure is constantly being monitored by Pressure Transducer.
Air Valve will open and close periodically at various pressures to expel air from chamber.

© Midmark Corporation 2000 SF-1597

Printed in U.S.A.

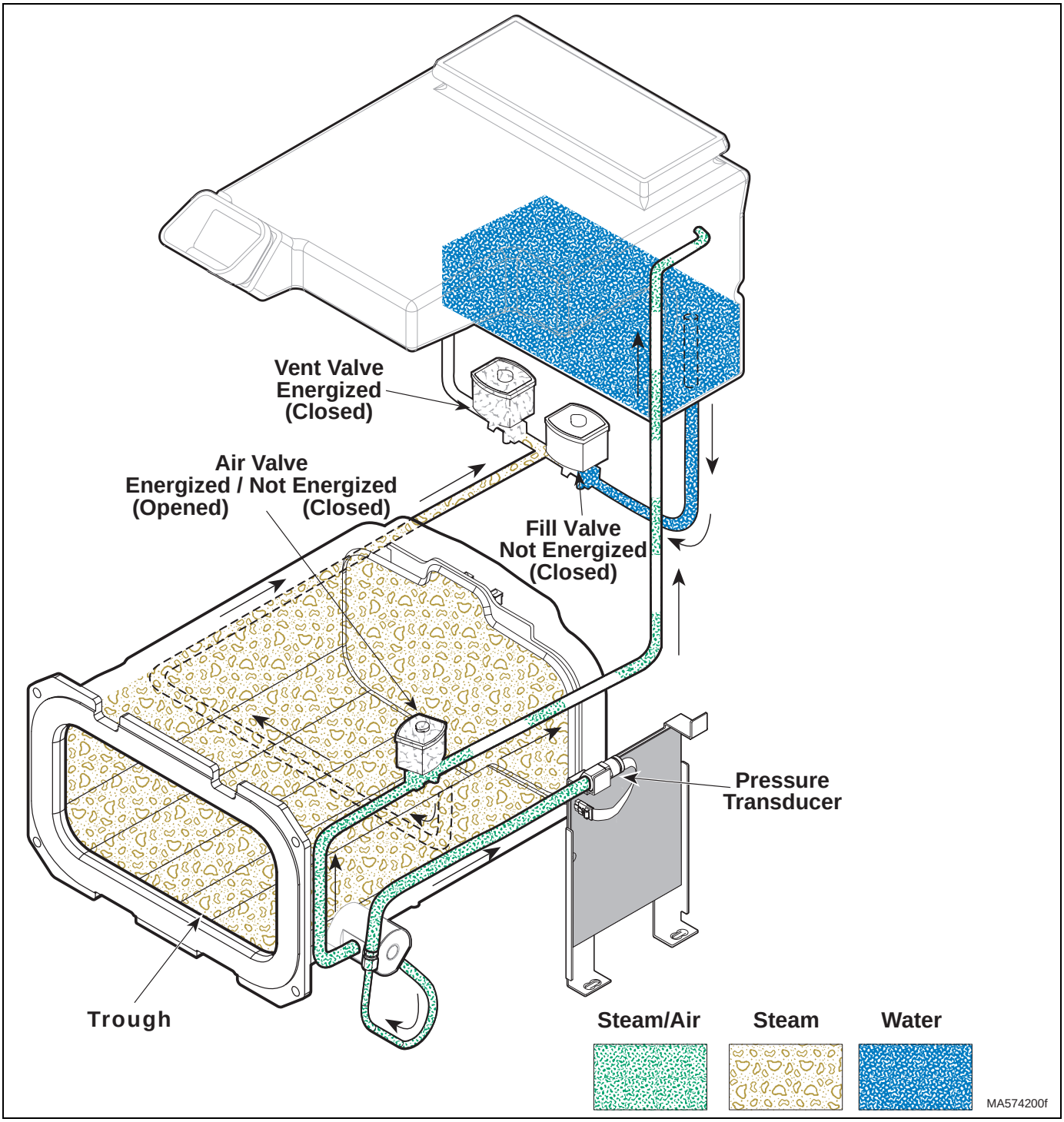

Figure 5-10. Sterilize Mode.

5.4 Sterilize Mode

At approximately 271°F (133°C) and 28 Psi (193 kPa) unit enters Sterilize Mode.
Time (3.5 min. Unwrapped or 9 min. Wrapped) begins counting down.
Pressure and temperature are being monitored by Temperature (RTD) probe and Pressure Transducer.

K4 contacts and Air Valve may open and close while Lower (Steam) Heater is cycled on and off by Solid State Relay (SSR) to maintain temperature and pressure.

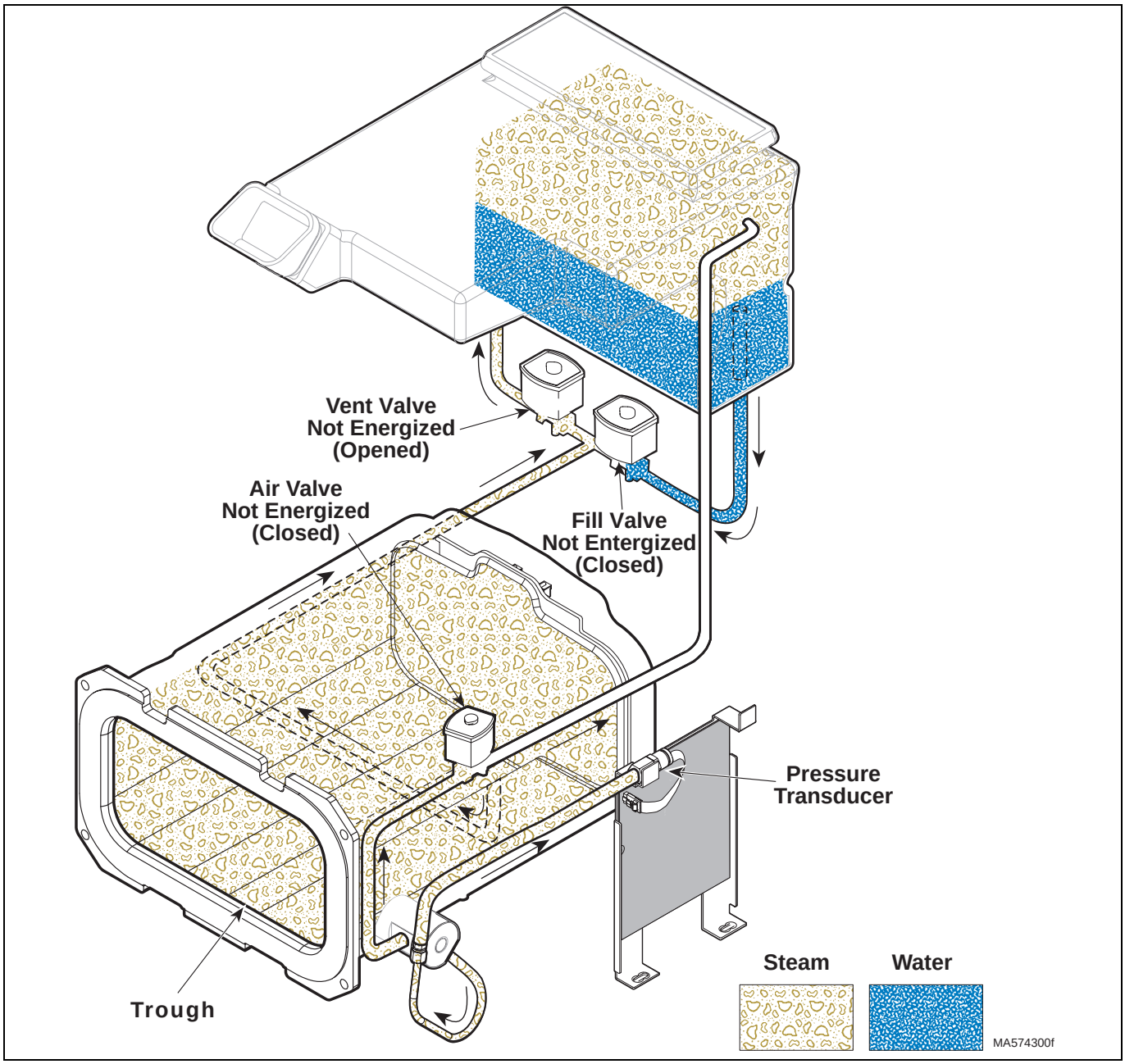

Figure 5-11. Vent Mode

5.5 Vent Mode

Ten seconds before end of Sterilizing cycle "Ready to Vent" is displayed.

After the time has elapsed the Main Control P.C. Board K2 Relay contacts open.

Power is removed from the Vent Valve solenoid.

The Vent Valve returns to its Normally Open position.

The chamber is vented thru the valve, condensing coil and into the reservoir.

The K5 contacts on the Main P.C. Board close for 1/2 second, energizing the Door Pulse solenoid, opening the door to the partially open position.

The Main Relay coil is not energized and its contacts are at their normally closed and open positions.

During the Dry cycle, the Solid State Relay (SSR) turns on and off supply current thru the normally closed contacts of the Main Relay to both the upper and lower heaters to maintain temperature inside the chamber. The Dry cycle can vary between 20 and 40 minutes. After the Dry cycle the heaters will continue to turn on and off to maintain preheat temperature for up to 90 minutes and then shut off if no cycle has been initiated.

© Midmark Corporation 2000 SF-1597

Printed in U.S.A.

SECTION VI

6.1 Introduction

The illustrated parts list provides information for identifying and ordering the parts necessary to maintain the unit in peak operating condition. Refer to paragraph 1.5 for parts ordering information.

6.2 Description of Columns

The item column of the parts list gives a component its own unique number. The same number is given to the component in the parts illustration. This allows a part number of a component to be found if the technician can visually spot the part on the illustration. The technician simply finds the component in question on the illustration and notes the item number of that component. Then, he finds that item number in the parts list. The row corresponding to the item number gives the technician the part number, a description of the component, and quantity of parts per subassembly. Also, if a part number is known, the location of that component can be determined by looking for the item number of the component on the illustration.

The Part No. column lists the MIDMARK part number for that component.

The Description column provides a physical description of the component.

The Qty. column lists the number of units of a particular component that is required for the subassembly. The letters “AR” denote “as required” when quantities of a particular component cannot be determined, such as: adhesive.

Bullets { • } in the Part No. column and the Description column show the indenture level of a component. If a component does not have a bullet, it is a main component of that illustration. If a component has a bullet, it is a subcomponent of the next component listed higher in the parts list than itself that does not have a bullet. Likewise, if a component has two bullets, it is a subcomponent of the next component listed igher in the parts list than itself that has only one bullet.

6.3 Torque Specifications and Important Assembly Notes

When specific assembly torque specifications, measurements, or procedures have been identified, by our engineering department, as required to assure proper function of the unit, those torque specifications measurements, and procedures will be noted on the parts illustrations. Adherence to these requirements is essential.

© Midmark Corporation 1999 SF-1597

Printed in U.S.A.

Pictorial Index

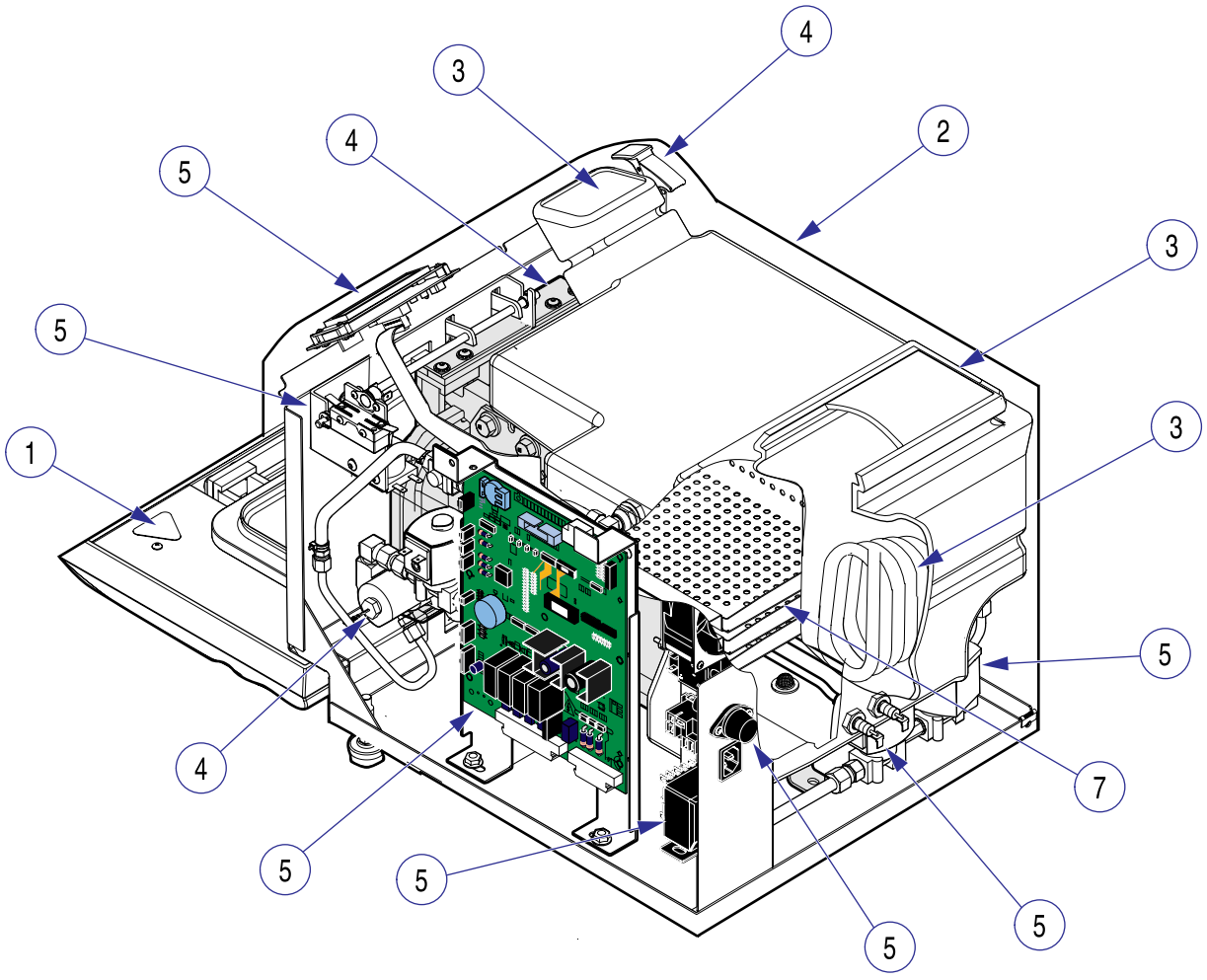

MA501400

Item	Part No.	Description	Page	Item	Part No.	Description	Page
	M4.9-001	Easyclave 115 volt		4		Chamber Assy Components	6-6
	M4.9-002	Easyclave 230 volt		5		Electrical Components	6-7
1		Labels and Decals	6-3	6		Printer Components (Not Shown)	6-8
2		Main Enclosures	6-4	7		Racks, Trays, and Cleaner	6-9
3		Plumbing Components	6-5	8		Packaging (Not Shown)	6-10

Always Specify Model & Serial Number

© Midmark Corporation 1999 SF-1597 Rev. 3/01

Printed in U.S.A.

Labels and Decals

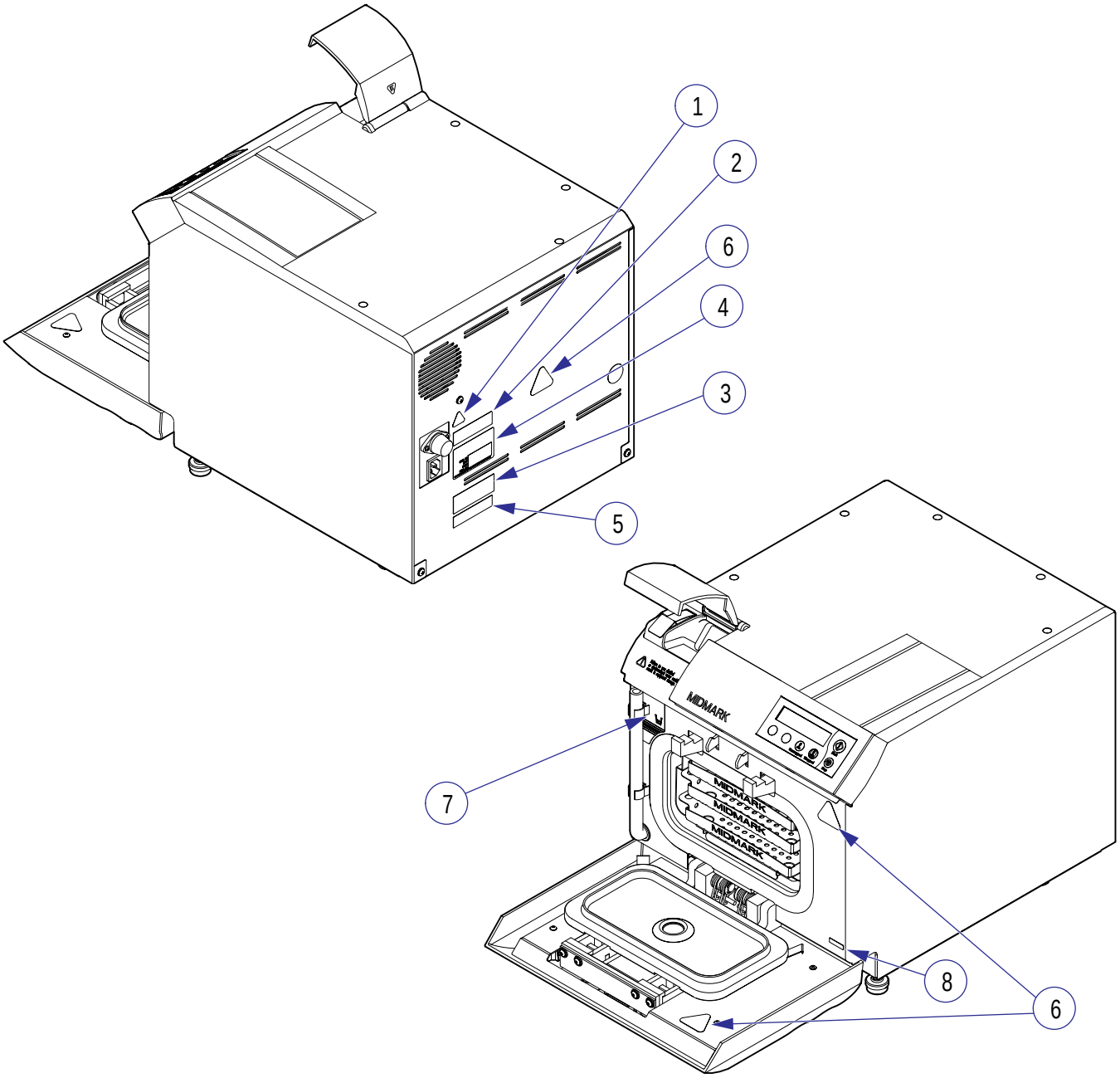

HA502400

Item	Part No.	Description	Qty.	Item	Part No.	Description	Qty.
1	061-0654-01	Caution Label	Ref.	5	061-0727-00	Patent Label	Ref.
2	061-0730-00	Fuse Label	Ref.	6	061-0726-00	Hot Surface Label	3
3	061-0729-00	C.U.L. Label	Ref.	7	061-0731-00	Water Level Label	1
4		Serial Number Label (Back	Ref.	8		Serial Number Label (Front)	Ref.9

Always Specify Model & Serial Number

© Midmark Corporation 1999 SF-1597

Printed in U.S.A.

Main Enclosure Components

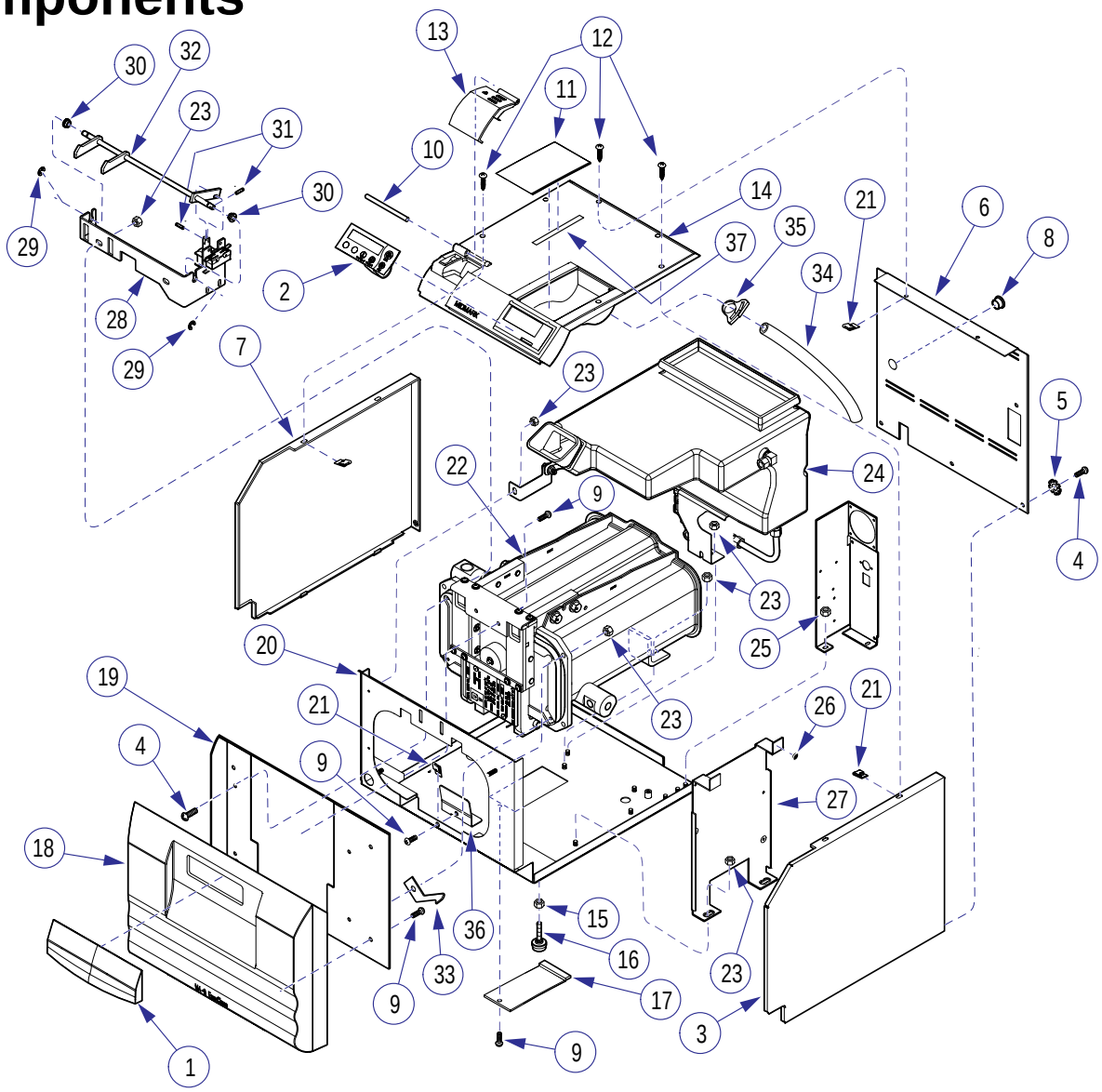

MA501501i

Item	Part No.	Description	Qty.
1	053-0931-00	Door Handle	1
2	015-1224-00	Membrane Switch	1
3	050-3995-00	Side Cover (Right Side)	1
4	040-0010-125	Screw	8
5	045-0001-31	Lock Washer	3
6	050-4948-00	Back Panel	1
7	050-3994-00	Side Cover (Left Side)	1
8	053-0050-04	Hole Plug	1
9	040-0008-103	Screw	6
10	057-0489-00	Fill Cover Pivot	1
11	053-0933-00	Printer Cover	1
12	040-0010-142	Screw	6
13	053-1286-00	Water Fill Cover	1
14	002-0680-00	M4.9 Top Cover Kit (Includes Items 2, 10, 11, 13 & 37)	1
15	041-0312-06	Nut	4
16	016-0404-00	Leveler Foot	4
17	050-4899-00	Base Access Panel	1
18	053-0929-00	Door Cover	1
19	050-4026-00	Inside Door Cover	1
20	030-1252-00	Base Weldment	1

Item	Part No.	Description	Qty.
21	H352623	Tinnerman Nut	11
22		Chamber Assembly (Refer to “Chamber Assembly” Elsewhere)	Ref.
23	041-0250-13	Nut	17
24		Reservoir Assembly (Refer to “Valve and Plumbing Assy” Elsewhere)	Ref.
25	029-2624-00	Power Bracket Assembly (115 volt)	1
	029-2624-01	Power Bracket Assembly (230 volt)	1
26	053-0716-00	Bumper	2
27	050-3993-00	PC Board Bracket	1
28	050-4886-00	Open Door Bracket	1
29	042-0176-00	E-Clip	2
30	016-0131-18	Flange Bearing	2
31	042-0001-09	Roll Pin	2
32	030-1218-00	Latch Pivot Weldment	1
33	050-2347-00	Door Spring	1
34	053-0391-05	Drain Hose	1
35	016-0748-01	Hose Clamp	1
36	050-4985-00	Base Front Cover	1
37	042-0204-01	Adhesive	3

Always Specify Model & Serial Number

© Midmark Corporation 1999 SF-1597 Rev 3/02

Printed in U.S.A.

Valve and Plumbing Assembly

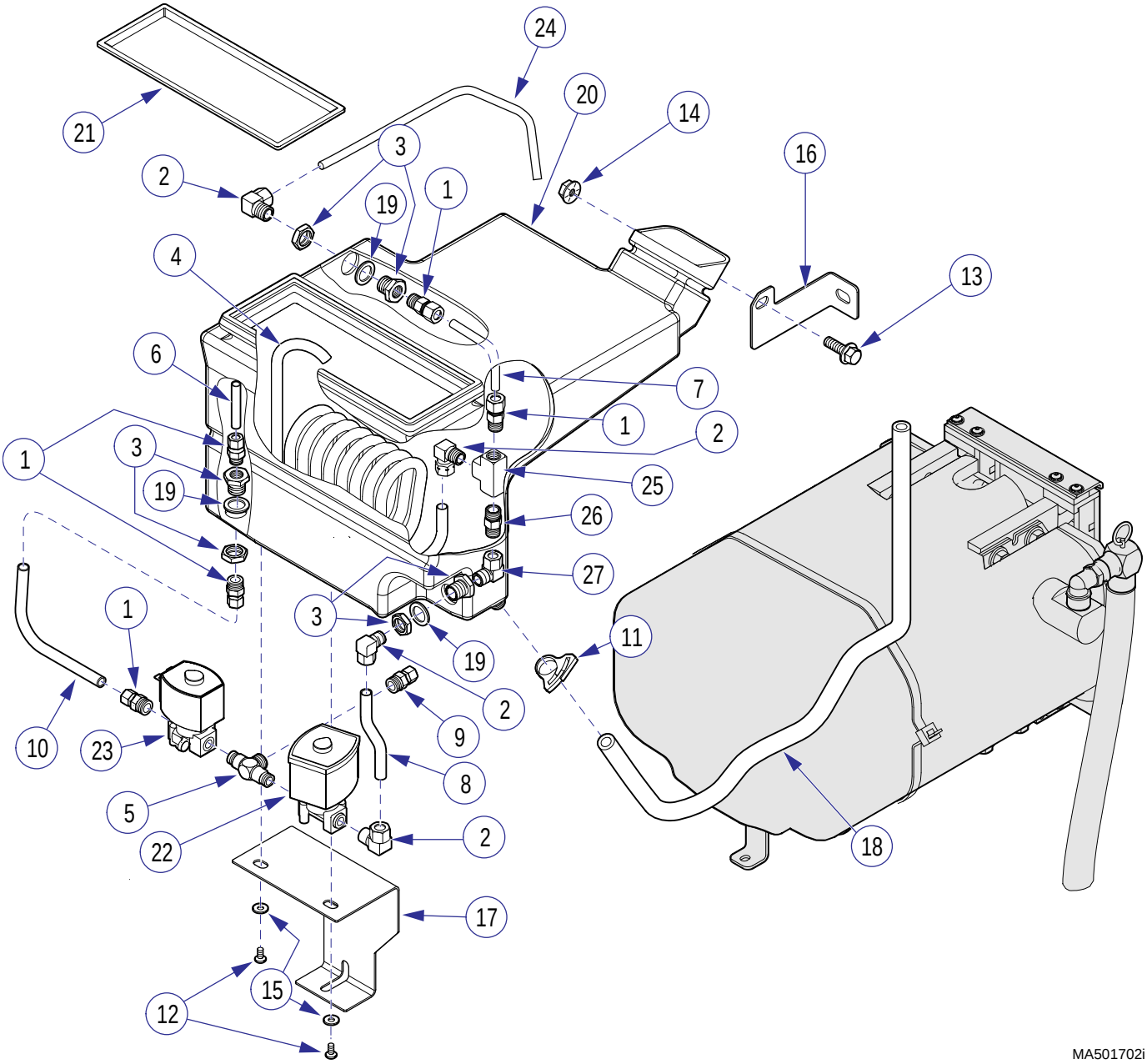

MA501702i

Item	Part No.	Description	Qty.
	029-2522-00	115 V Reservoir Assy (Includes Items 1 thru 23)	1
	029-2522-01	230 V Reservoir Assy(Includes Items 1 thru 23)	1
1	• 014-0183-02	• 3/8 Male Connector	3
2	• 014-0184-01	• Male Elbow	4
3	• 014-0209-00	• Bulkhead Coupling	3
4	• 014-0417-00	• Condensing Coil	1
5	• 014-0343-00	• Tee Fitting	1
6	• 014-0346-00	• Water Level Tube	1
7	• 014-0416-00	• Vent Manifold/Tube	1
8	• 014-0370-00	• Vent Tube	1
9	• 014-0383-00	• 3/8 Female Connector	1
10	• 014-0385-00	• Fill Tube	1
11	• 016-0748-01	• Hose Clamp	1
12	• 040-0010-74	• Screw	2
13	• 040-0250-95	• Bolt	1
14	• 041-0250-13	• Nut	1
15	• 045-0001-00	• Washer	2
16	• 050-4881-00	• Reservoir Upper Bracket	1
17	• 050-4882-00	• Reservoir Lower Bracket	1
18	• 053-0391-04	• Drain Tube	1
19	• 053-0975-00	• Washer	3
20	• 053-1143-01	• Reservoir Tank (Apply 042-0021-00 Adhesive)	1
21	• 053-1143-02	• Reservoir Tank Lid (Apply 042-0021-00 Adhesive)	1
22	•	• Solenoid Valve (Refer to “Electrical Components” Elsewhere)	Ref.
23	•	• Solenoid Valve (Refer to “Electrical Components” Elsewhere)	Ref.
24	014-0371-00	Tube	1
25	• 014-0045-02	• Nipple	1
26	• 014-0418-00	• Tee Fitting	1
27	• 014-0194-01	• 90 Degree Elbow	1

Always Specify Model & Serial Number

© Midmark Corporation 1999 SF-1597 Rev 8/02

Printed in U.S.A.

Chamber Assembly

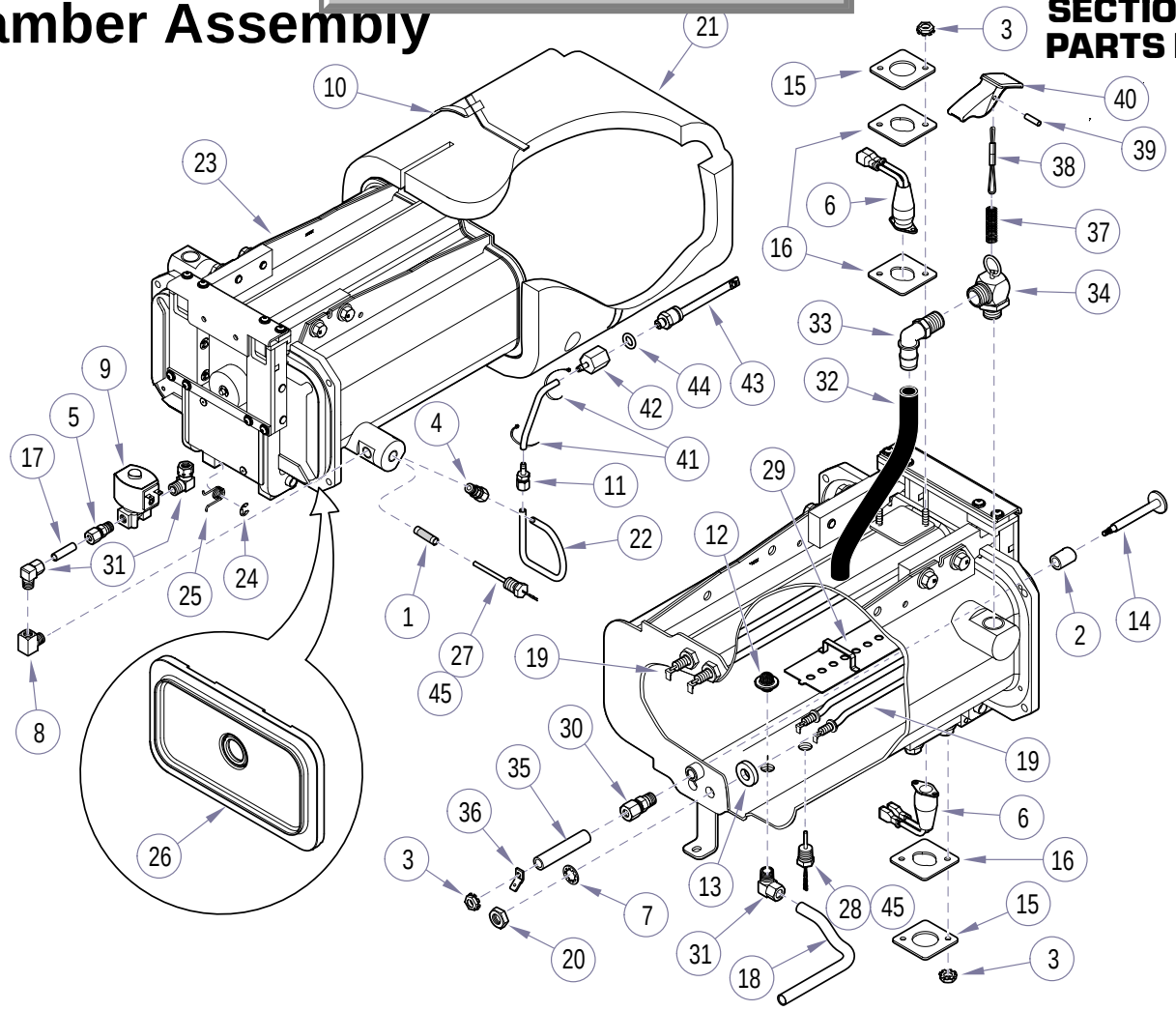

MA501602i

Item	Part No.	Description	Qty.
	029-2455-00	M49 Chamber Assembly (115 volt, includes Items 1 thru 36)	1
	029-2455-01	M49 Chamber Assembly (230 volt includes Items 1 thru 36)	1
1	• 016-0890-00	• Internal filter Screen	1
2	• 053-0407-00	• Bushing	1
3	• 041-0006-02	• Locknut	5
4	• 014-0183-01	• 1/4 Male Connector	1
5	• 014-0183-02	• 3/8 Male Connector	1
6	• 015-1451-00	• Thermostat Assembly	2
7	• 045-0001-56	• Lock Washer	4
8	• 014-0194-01	• Street Elbow (90 degree)	1
9	•	• Solenoid Valve (Refer to “Electrical Components” Elsewhere)	Ref.
10	• 015-0013-07	• Cable Tie	1
11	• 014-0217-00	• Compression Connector	1
12	• 016-0790-00	• Mesh Filter	1
13	• H98137	• Heater Gasket	4
14	• 030-0858-00	• Level Sensor	1
15	• 053-4946-00	• Thermostat Clamp Bracket	2
16	• 053-1198-00	• Thermostat Insulator	3
17	• 014-0354-00	• Air Valve Tube	1
18	• 014-0384-00	• Fill Tube	1
19	• 015-1403-00	• Heating Element (115 V., Incl. Item 20)	2
	• 015-1403-01	• Heating Element (230 V., Incl. Item 20)	2
20	• •	• • Nut (2 per assy)	4
21	• 053-0932-01	• Insulation Blanket	1
22	• 014-0391-00	• Pressure Sensor Tube	1
23	• 029-2454-00	• Pressure Vessel Assembly (Includes Items 24 thru 26)	1
24	• • 042-0007-02	• • E-Rings	4
25	• • 025-0057-00	• • Torsion Spring	4
26	• • 053-0930-00	• • Door Gasket	1
27	• 002-0682-00	• M4.9 Temperature Sensor Kit (Includes Item 45)	1
28	• 015-1435-00	• Trough Sensor	1
29	• 030-1264-00	• Upper Tray Plate Weldment	1
30	• 014-0212-00	• Male Connector	1
31	• 014-0184-01	• Male Elbow	3
32	• 053-0613-03	• Neoprene Tubing	1
33	• 014-0258-00	• Nylon Male Elbow	1
34	• 014-0195-03	• Pressure Relief Valve	1
35	• 053-0390-01	• Teflon Flexible Tube	1
36	• 015-0595-00	• Terminal	1
37	025-0061-00	Compression Spring	1
38	029-2357-00	Pressure Relief Lanyard	1
39	042-0001-07	Roll Pin	1
40	053-0953-00	Pressure Relief Tab	1
41	015-0013-02	Cable Tie	2
42	051-0898-00	Transducer Fitting	1
43	002-0681-00	M4.9 Pressure Transducer Kit (Includes Items 41, 42, & 44)	1
44	014-0176-41	O-Ring	1
45	014-0404-00	567 PST Thread Sealent	AR

Always Specify Model & Serial Number

© Midmark Corporation 1999 SF-1597 Rev 8/01

Printed in U.S.A.

Electrical Components

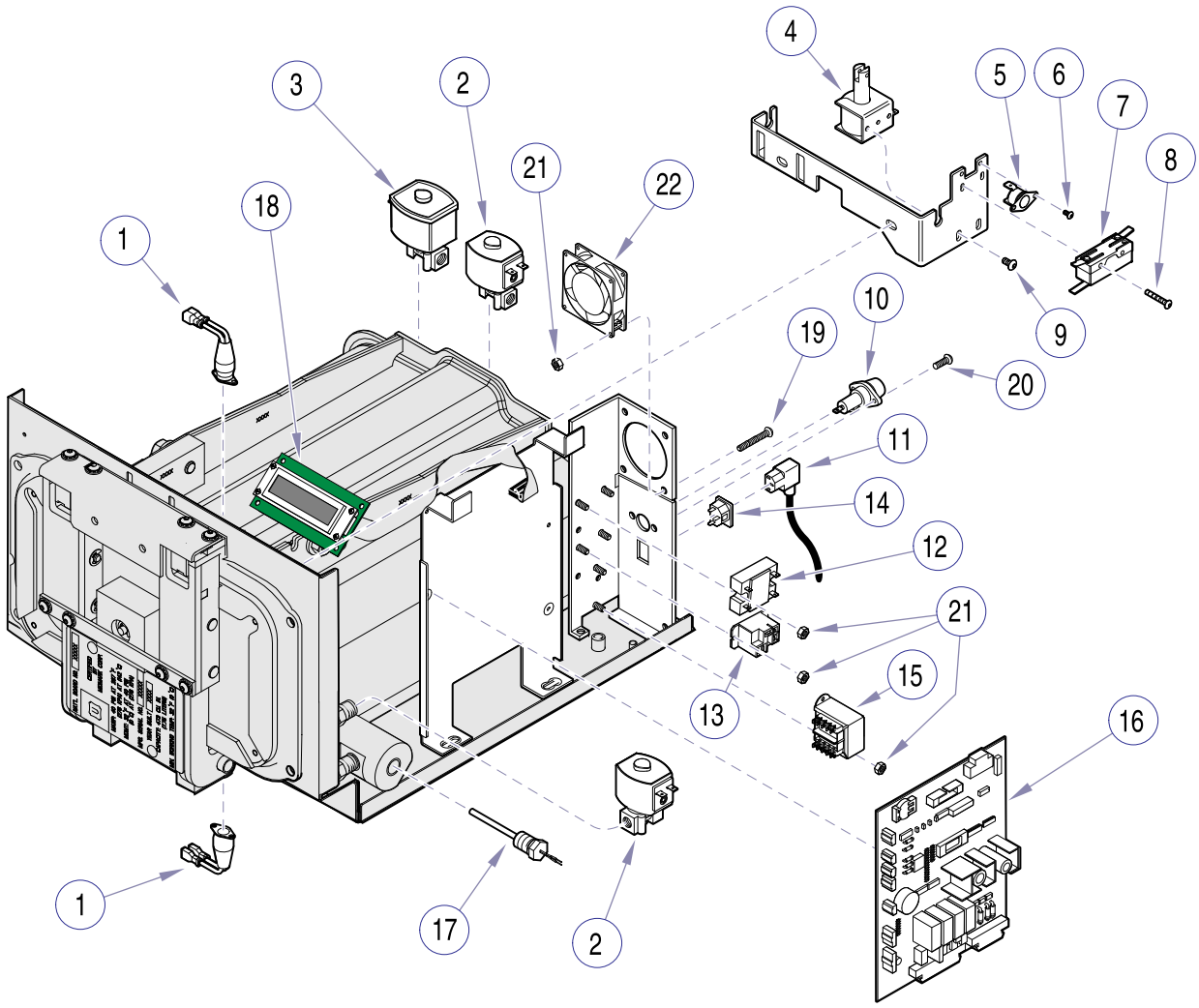

MA501800i

Item	Part No.	Description	Qty.
1	015-1451-00	Thermostat Assembly (Refer to “Chamber Assembly” Elsewhere)	2
2	014-0381-00	N.C. Fill Solenoid Valve (115 V)	2
	014-0381-01	N.C. Fill Solenoid Valve (230 V)	2
3	014-0300-00	N.O. Vent Solenoid Valve (115 V)	1
	014-0300-01	N.O. Vent Solenoid Valve (230 V)	1
4	015-0641-00	M4.9 Pulse Solenoid (115 V)	1
	015-0641-01	M4.9 Pulse Solenoid (230 V)	1
5	015-1430-00	Fan Control Themostat	1
6	040-0006-72	Screw	2
7	015-1184-00	Door Latch Interlock Switch	1
8	040-0006-90	Screw	2
9	040-0010-141	Screw (Apply Loctite #042-0025-00)	2
10	015-1471-00	Fuseholder	1
	• 015-1472-00	• Fuse (115 V)	1
	• 015-1472-01	• Fuse (230 V)	1

Item	Part No.	Description	Qty.
11	015-0640-00	Cord Set	1
12	015-1190-00	Relay	1
13	015-1191-00	SPDT Relay	1
14	015-0639-00	AC Connector Recepticle	1
15	015-1272-00	Transformer	1
16	*N.L.A.*	M4.9 PC Board Kit	1
17		Temperature Sensor (Refer to “Chamber Assembly” Elsewhere)	Ref.
18	015-1180-00	Display PCB	1
19	040-0006-95	Screw	4
20	040-0006-78	Screw	8
21	041-0006-02	Nut	12
22	015-1368-00	Axial Flow Fan (115 V)	1
	015-1368-01	Axial Flow Fan (230 V)	1

“N.L.A. Denotes “No Longer Available”

Always Specify Model & Serial Number

© Midmark Corporation 1999 SF-1597 Rev 7/10

Printed in U.S.A.

Printer Components

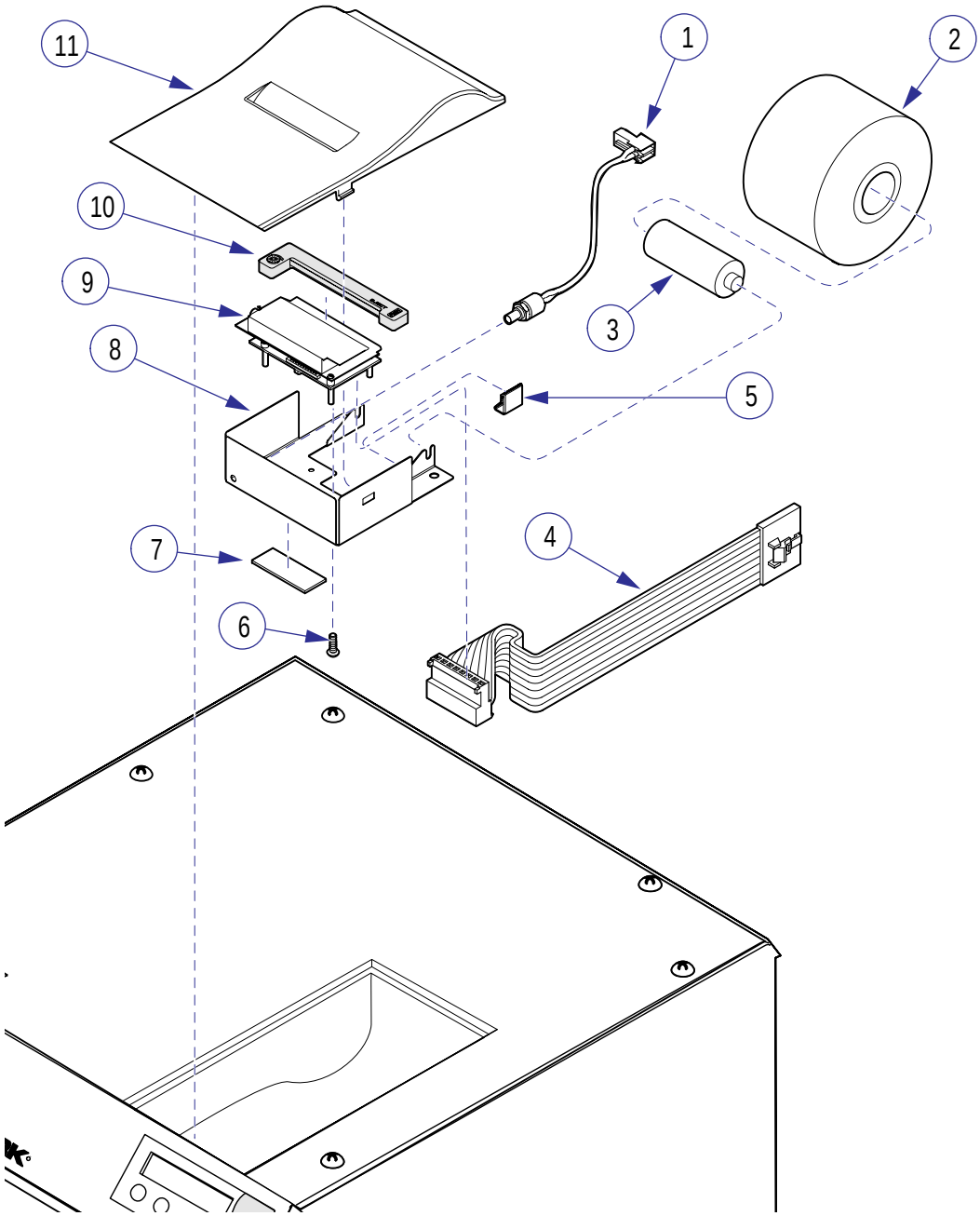

MA502100i

Item	Part No.	Description	Qty.	Item	Part No.	Description	Qty.
1	015-1323-00	Printer Feed Cable	1	7		Accessory Serial Number Tag	1
2	060-0008-00	Paper Roll	1	8	050-5011-00	Printer Bracket	1
3	053-0506-00	Paper Roll Spindle	1	9	015-1255-00	Printer	1
4	015-1529-00	Printer Ribbon Cable Assembly	1	10	053-0505-00	Printer Ribbon	1
5	053-1231-01	Flat Wire Cable Clamp	1	11	053-0927-00	Printer Cover	1
6	040-0002-07	Screw	4				

Always Specify Model & Serial Number

© Midmark Corporation 1999 SF-1597 Rev 4/01

Printed in U.S.A.

Racks, Trays, and Cleaner

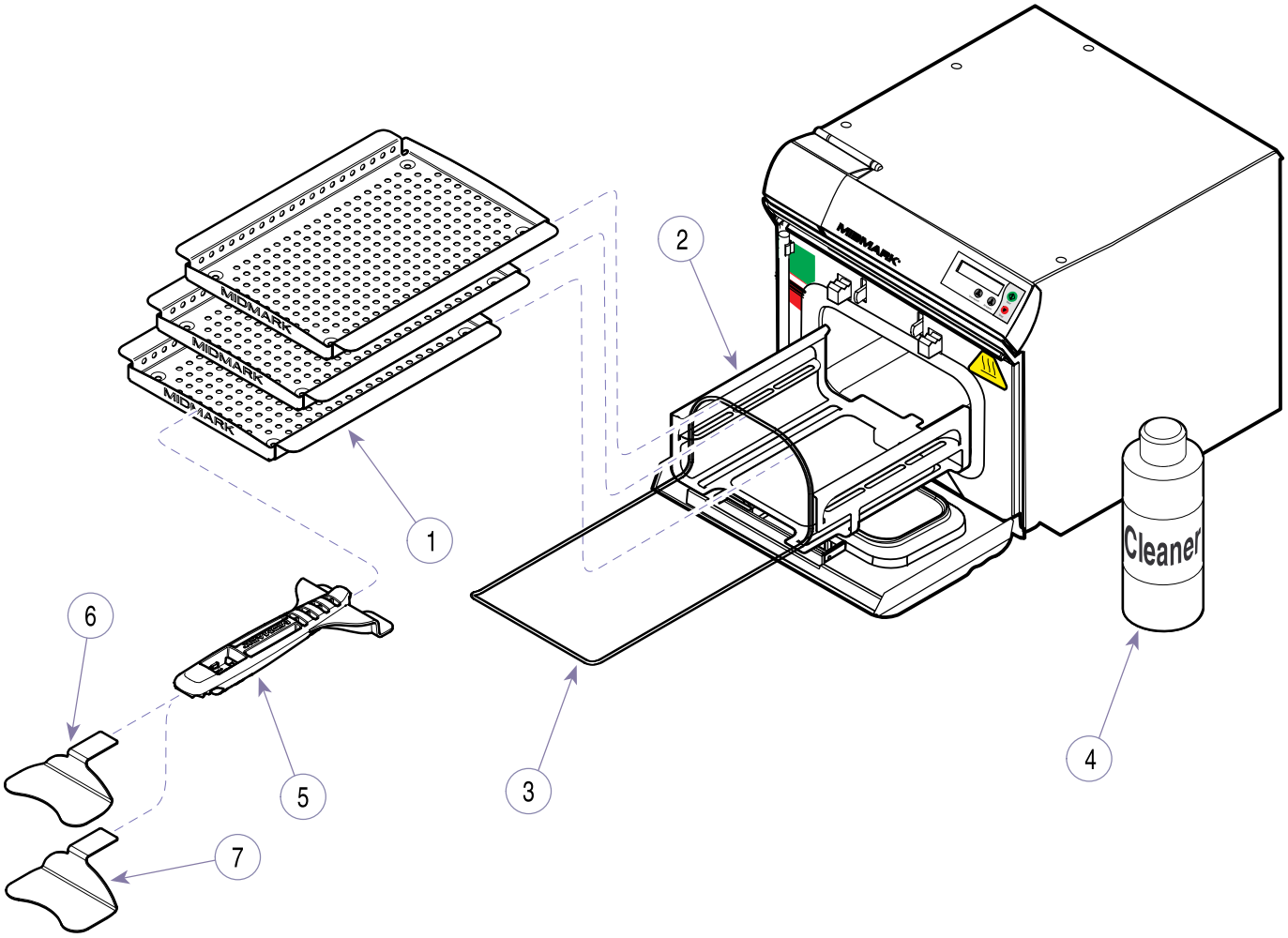

MA501900

Item	Part No.	Description	Qty.	Item	Part No.	Description	Qty.
1	050-4145-00	Tray	3	5	053-1038-00	Tray/Cassette Tool	1
2	050-4914-00	Cassette Tray Rack	1	6	050-4660-00	Tray Plate	1
3	057-0626-00	Ejection Bail	1	7	050-4660-01	Casette Plate	1
4	002-0396-00	Speed Clean (16oz Bottle)	1				
	002-0396-01	Speed Clean (Case-16 oz Bottles)	12				

Always Specify Model & Serial Number

© Midmark Corporation 1999 SF-1597 Rev 7/01

Printed in U.S.A.

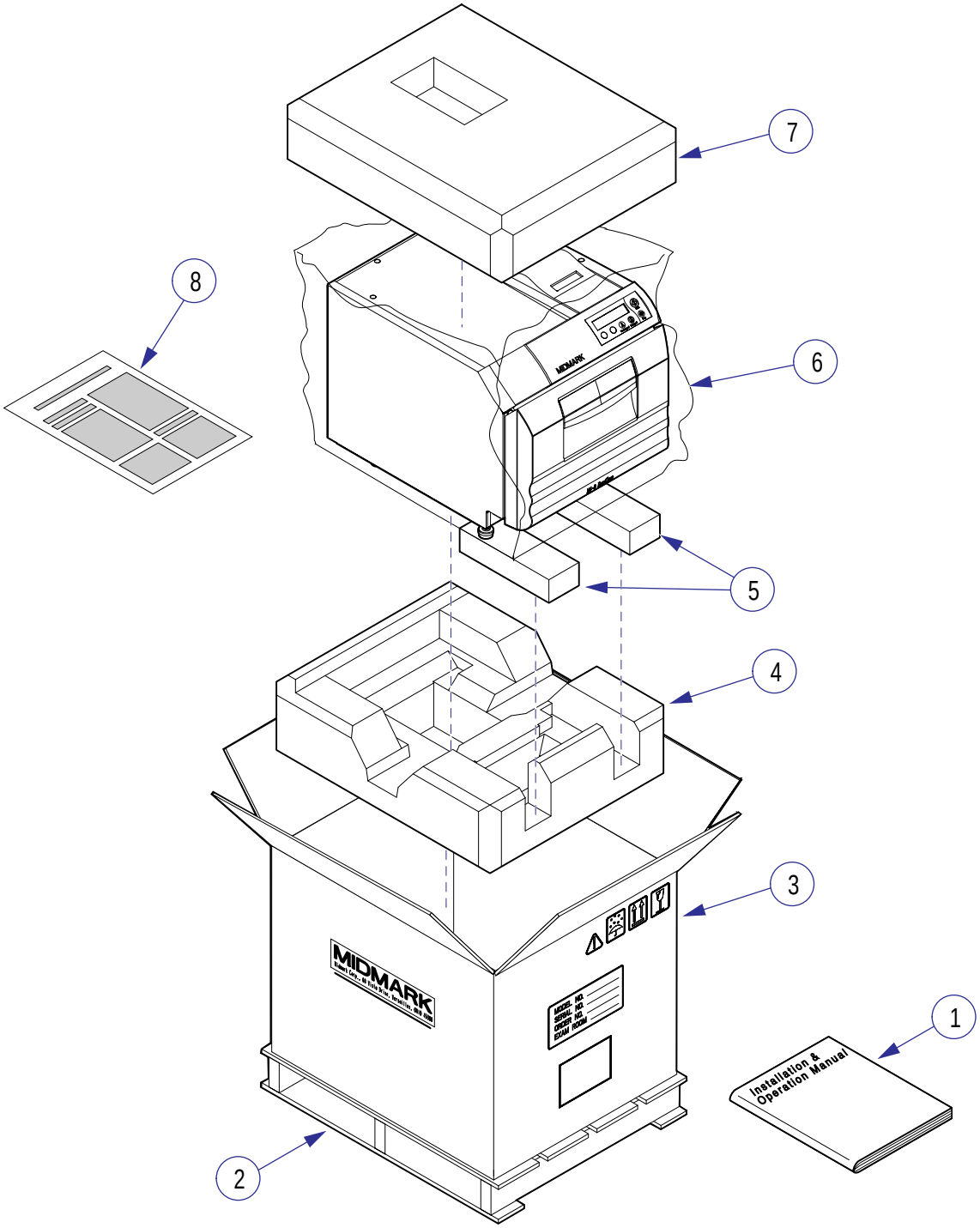

HA502600i

Item	Part No.	Description	Qty.	Item	Part No.	Description	Qty.
1	003-0958-00	Installation/Operation Manual	1	5	054-0278-00	Packaging Block	2
2	063-9940-00	Skid	1	6	053-0061-01	Plastic Bag	1
3	066-0773-00	Carton	1	7	054-0277-00	Top Foam Pad	1
4	054-0276-00	Bottom Foam Pad	1	8	077-0033-00	Material Safety Data Sheet	1

Always Specify Model & Serial Number

© Midmark Corporation 1999 SF-1597

Printed in U.S.A.

External Condensing Tank

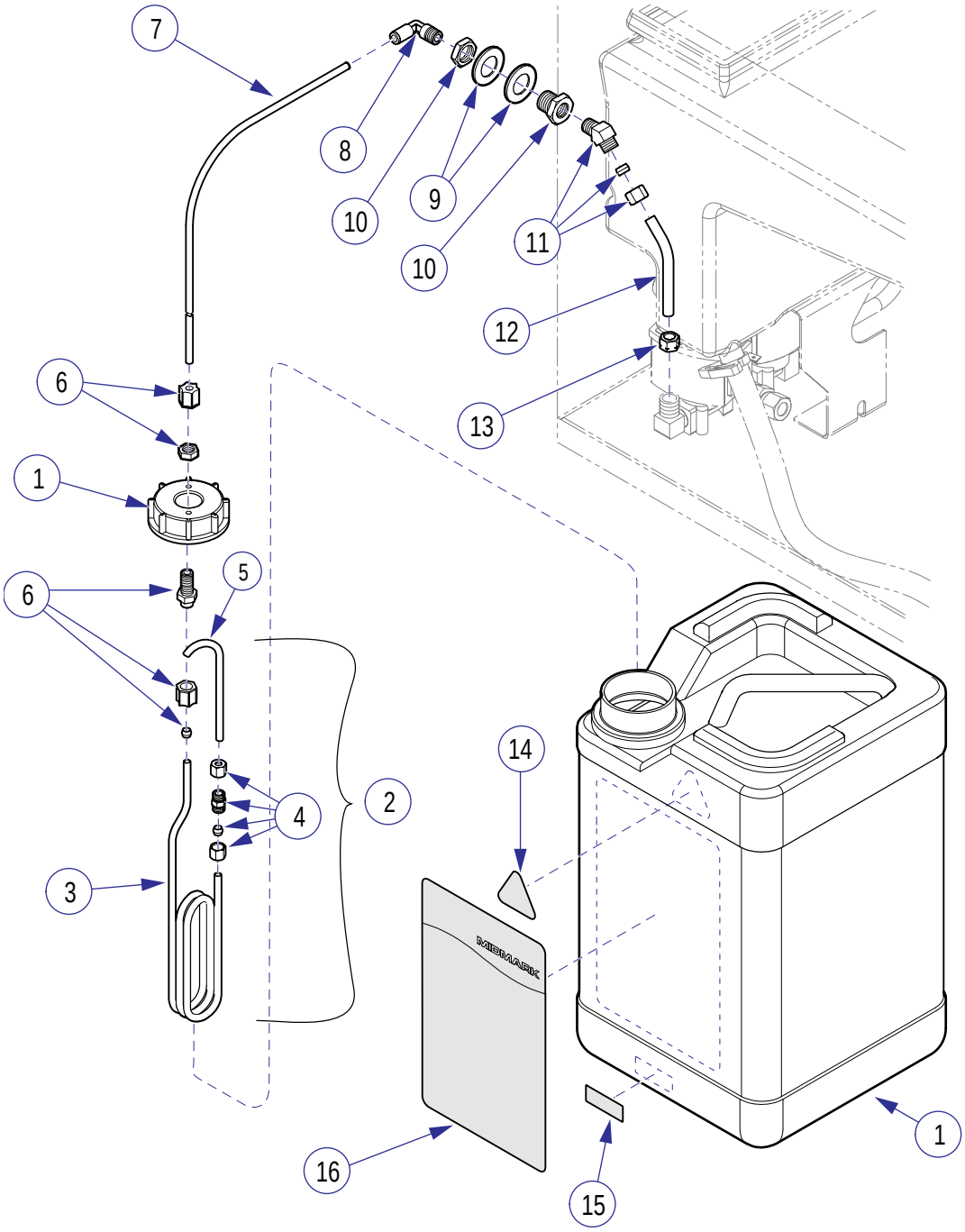

MA576900i

Item	Part No.	Description	Qty.
	9A260001	External Condensing Tank	
1	053-1014-01	External Condensing Tank	1
2	029-2356-00	External Tank Coil Assy.(Includes Items #3, #4, & #5)	1
3	014-0330-00	External Condensing Coil	1
4	014-0352-00	1/4 Male Connector	1
5	014-0351-00	External Condensing Coil Spout	1
6	014-0350-00	Plastic Bulkhead Union	1
7	053-0390-00	Tubing 60” Length	AR
8	014-0341-02	90 Degree Elbow Push Connect	1
9	045-0001-112	Washer	2
10	014-0209-00	Bulkhead Coupling	1
11	014-0201-00	45 Degree Male Elbow	1
12	014-0394-00	External Vent Tube	1
13	014-0392-01	Compression Nut/Sleeve Assy.	1
14	061-0726-00	Hot Surface Label	1
15		Serial Number Tag	1
16	061-0738-00	External Condensing Tank Label	1

Always Specify Model & Serial Number

© Midmark Corporation 1999 SF-1597

Printed in U.S.A.

Pouch Rack

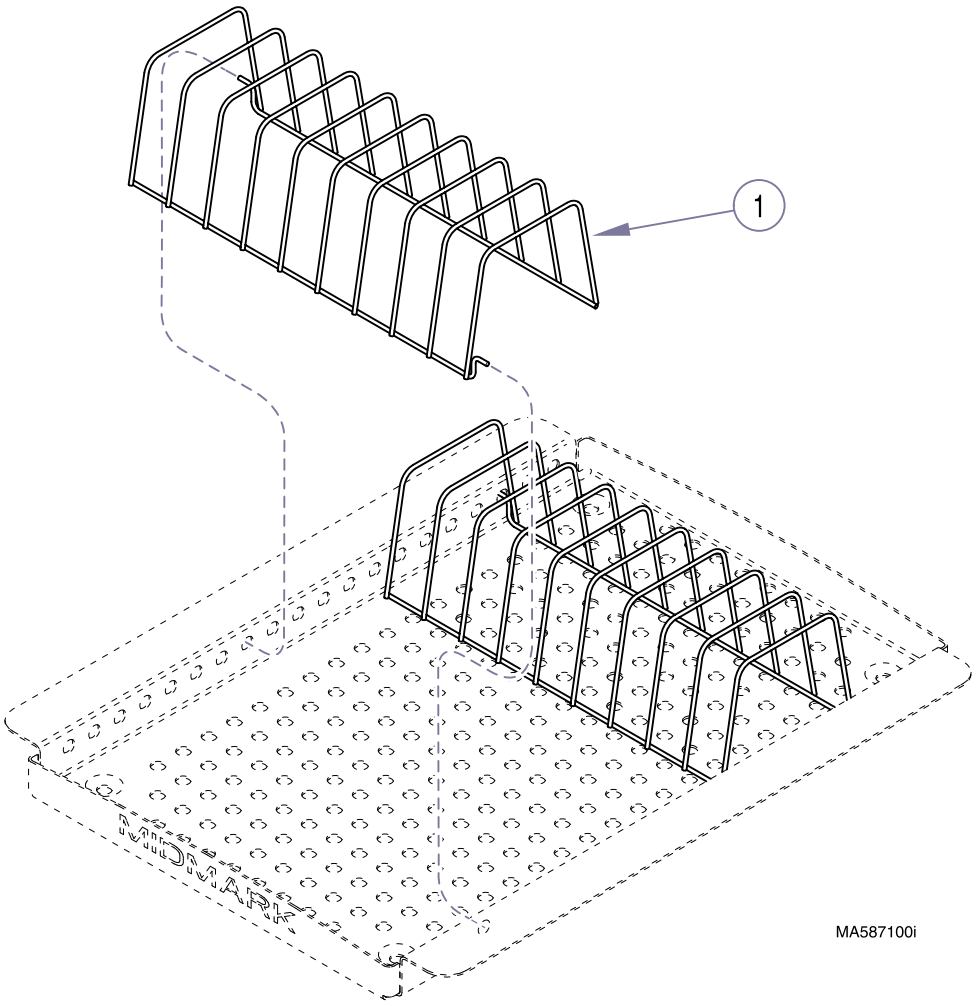

MA587100i

Item	Part No.	Description	Qty.	Item	Part No.	Description	Qty.
	9A258001	Pouch Rack (Includes Item 1)	1	1	• 030-1163-00	• Pouch Rack	2

Always Specify Model & Serial Number

© Midmark Corporation 1999 SF-1597

Printed in U.S.A.

Return To Table Of Contents

COMMENTS

The Technical Publications Department of Midmark Corporation takes pride in its publications. We are sure that our manuals will fill all of your needs when you are performing scheduled maintenance, servicing, or repairs on a Midmark product.

However, if you find any errors or feel that there should be a change, addition, or deletion to a manual, please let us know!

Page(s) and Paragraph(s) Needing Changed:

Description of Error or Desired Change:

Please fax or mail a copy of this completed comment sheet to:

Midmark Corporation
ATTN: Technical Publications Department
60 Vista Drive
Versailles, Ohio 45380
Fax: (937) 526-5542

© Midmark Corporation 2000 SF-1621

Printed in U.S.A.

Return To Table Of Contents

FAX ORDERING FORM

(SERVICE PARTS ONLY)

NOTES:

- ALL BLOCKED AREAS MUST BE COMPLETED.
- USE FOR NON-WARRANTY FAX ORDERS ONLY. WARRANTY ORDERS MUST BE TELEPHONED IN (1-800-MIDMARK).

ATTENTION: SERVICE DEPARTMENT FAX#: 877-249-1793

ACCT #: ______ P.O. #: ______ DATE: ______

NAME: ______

ADDRESS: ______

CITY, ST.: ______

CONTACT: ______

PHONE: ______

SHIP TO: ______

☐ NON-EMERGENCY ORDER - TO SHIP WITHIN 72 HOURS IF PART(S) IN STOCK.

☐ EMERGENCY ORDER - TO SHIP WITHIN 24 HOURS IF PART(S) IN STOCK (IF ORDER IS RECEIVED BEFORE 1:00 P.M. E.S.T.).

SEND NOTIFICATION IF PARTS ARE NOT AVAILABLE TO SHIP WITHIN 24 HOURS VIA E-MAIL OR FAX TO: ______

METHOD OF SHIPMENT

UPS	FED EX	OTHER
☐ NEXT DAY A.M.	☐ NEXT DAY A.M.	______
☐ NEXT DAY P.M.	☐ NEXT DAY P.M.	
☐ 2ND DAY	☐ 2ND DAY	
☐ GROUND	☐ ECONOMY	

QTY.	PART #	DESCRIPTION (SPECIFY COLOR OF ITEM IF APPLICABLE)	COLOR CODE	PRICE/PER
			TOTAL COST: $	

Return To Table Of Contents

Return To Table Of Contents

Midmark Corporation
60 Vista Drive
P.O. Box 286
Versailles, Ohio 45380-0286
937-526-3662
Fax 937-526-5542
midmark.com

Because we care.

Subject to change without notice.
Refer to www.Documark.com for latest revision.

© Midmark Corporation - 2005

Printed in U.S.A.